JUN-AIR®

Compressor

Model 6 motor / 18-40

Operating manual

Betriebsanweisung

Mode d'emploi

Modo de empleo

Gebruiksaanwijzing

Betjeningsforskrift

Spare parts

3010099	Receiver 4l without inspection plug CE, silver
3050099	Receiver 4l with inspection plug CE, silver, internally coated
3210095	Receiver 15l with inspection plug ASME, silver
3210099	Receiver 15l with inspection plug, CE, silver, fluid in nozzle
3410092	Receiver 25l with inspection plug, ASME, silver
3410099	Receiver 25l with inspection plug, CE, silver
3512097	Receiver 40l with inspection plug, CE/ASME, silver
3695298	Receiver 150l with inspection plug, CE, silver
4070500	Activated carbon filter DH AC-0003G
4071000	Filter 5um w/manual drain
4071020	Regulator R07-280-RNMG, 10 bar
4071030	Filter regulator 5um w/manual drain
4071055	Filter 0.01um w/manual drain
4071080	Lubricator L07-220-MPMG
4110000	Rapid coupler 1/4” external thread CEJN
4120000	Nipple 1/4”
4130000	Hose tail nipple 1/4” f/rapid coupler
4210000	Trolley f/6-10/15/25
4211000	Trolley f/6-4/3-1.5
4310000	Blow gun black
4311000	Blow gun black f/inflators
4380000	Ball inflator
4381000	Bicycle inflator
4382000	Car tyre inflator
4383000	Hose clamp 8-12 mm
4410000	PVC air hose 1/4”
4430000	Recoil air hose 1/4” 7.5m black
4520000	Overload protector f/6 motor 230V
4521000	Overload protector f/6 motor 120V
4522001	Overload protector f/3 motor 230V (new)
4522201	Overload protector f/3 motor 120V (new)
4522500	Overload spring f/6 motor
4523000	Starting relay 230V f/6 motor
4524000	Starting relay 120V f/6 motor
4526001	Starting relay f/3 motor 230V (new)
4526201	Starting relay f/3 motor 120V (new)
4526500	Terminal box compl. f/3 and 6 motors
4526600	Cover f/terminal box f/3 and 6 motors
4527000	Fastening spring f/3 and 6 motors
4528000	Bolt f/top bearing f/6 motor
4529000	Top bearing f/6 motor
4545000	Cover f/6 motor
4546000	Gasket f/cover f/6 motor
4547000	Pressure pipe f/6 motor (incl. gasket)
4548000	Gasket f/pressure pipe f/6 motor
4549000	Bolt f/pressure pipe f/6 motor
4550000	Copper washer f/6 motor
4551000	Suspension spring f/6 motor
4555000	Cylinder head f/6 motor
4556000	Bolt f/cylinder head f/6 motor

4560100	Casing bottom f/3 motor 230V silver (new)
4561000	Casing bottom f/6 motor silver
4571000	Rib cover f/6 motor, silver
4574300	Rib cover f/3 and 4 motors silver
4610201	Cylinder head f/3 motor (new)
4610501	Spring w/bushing f/3 motor (new)
4610601	Top bearing f/3 motor (new)
4611301	Cover f/terminal board f/3 motor (new)
4611350	Bracket f/terminal board f/3 motor (new)
4611360	Bracket f/klixon f/3 motor (new)
4646000	Gasket f/cover (= 4548000)
4649500	Bolt f/safety valve f/3 motor
4656000	Bolt f/cylinder head f/3 motor
4750000	Control lamp 230V
4750200	Control lamp 120V
5030000	Pressure switch MDR 2/11 compl.
5033000	Pressure switch MDR 21/11 w/unloader
5035000	Pressure switch MDR 2/11 w/unloader
5075010	Pressure switch MDR 21/11 UL compl.
5075100	Pressure switch MDR21/11 UL complete w/unloader
5085000	Pressure switch MDR 4S/11 compl.
5130000	Gauge 40 0-16 bar 1/8” down
5210000	Capacitor start 70uF
5230000	Capacitor start 160uF UL
5320226	Handle, multi complete
5340001	Handle f/6-15/6-25 complete
5410000	Oil level glass compl.
5410000	Oil level glass compl.
5412000	Intake filter f/6 motors, complete
5414000	Oil inlet screw w/gasket
5414500	Non return valve
5416000	Safety valve 10 bar / 145 psi
5416200	Safety valve 16 bar / 232 psi
5416200	Safety valve 16 bar / 232 psi
5418000	Drain cock 1/4” 4l
5419500	Drain cock 1/4” 15l
5420000	Drain cock 1/4” 25l
5421001	Drain cock 1/4” 40l (new)
5425000	Distributor f/non return valve compl.
5425000	Distributor f/non return valve compl.
5425500	Safety valve TÜV 10 bar
5426500	Safety valve TÜV 16 bar
5427000	Connecting piece 1/4”
5429000	Adaptor 5-way compl.
5429100	Adaptor 4-way compl.
5429500	Adaptor 2-way compl.
5451400	Fan compl. 120V 120x120mm
5451500	Fan compl. 230V 120x120mm
5453000	Fan guard 120x120
5470251	Spare parts kit f/replacement of valve plate f/3 motor (new)
5470300	Spare parts kit f/replacement of valve plate f/6 motor

5512000	Label ”Min-Max”
5610000	Oil SJ-27 in 0.5l bottle
5612300	Drain bottle 1 l multi supplied separately incl. bracket for pipe mounting and magnet
5825000	Spring f/pressure control valve
5940000	Plastic insulation f/electric equipment
5950000	Plastic slide f/electric equipment
5960000	Cable relief
6214000	Copper washer Ø10xØ6x1 mm
6221000	Gasket f/pressure control valve
6235000	Gasket f/oil filling
6241800	O-ring f/1” plug - 32x5 mm
6244000	O-ring f/rib cover 6 motor
6244200	O-ring f/rib cover 3/4 motor
6245800	O-ring Ø47x5 f/1 1/2” plug
6246000	O-ring f/2” plug
6250000	Socket 25 mm black
6252010	Socket f/handle 3-1.5/6-4 Ø22
6253000	Rubber base f/handle Ø25x30 M8x8
6253200	Rubber base f/3-4000 models
6271000	Rubber grommet f/6 motor
6272000	Rubber grommet f/3-4 motor
6290200	Plastic handle black Ø22 mm
6312000	Bolt M8x35 FZB
6313200	Bolt M6x30 FZB
6317000	Nut M12 DIN934-8
6320200	Counter nut M8 flat FZB
6330000	Screw CHJ M4x5 FZB
6338000	Unbraco boltUNF 10-32 3/4”
6340500	Unbraco plug 1/8”
6341900	Unbraco bolt M6x16 FZB
6341950	Unbraco bolt M6x25 FZB
6350000	Washer ø23x11.5x1.5 FZB
6351000	Clamp f/electrical equipment
6356600	Washer 3/16” x 30 mm 4 motor
6357800	Washer Ø28.5 x Ø13 x 1.5 FZB
6372700	Lock nut M8 FZB
6413000	Flex hose 1/8” 13 (15) cm
6417000	Flex hose 1/8” 17 (19) cm
6420000	Flex hose 1/8” 20 (22) cm
6426000	Flex hose 1/8” 26 (28) cm
6433000	Flex hose 1/8” 33 (35) cm
6439000	Flex hose 1/8” 39 (41) cm
6450000	Flex hose 1/8” 50 (52) cm
6463000	Flex hose 1/8” 64 (66) cm
6463400	Flex hose 1/8” 80 (82) cm
6463700	Flex hose 1/8” 110 (112) cm
6960500	Spacer 17 mm
6961000	Spacer 23.3 mm (Ø11x1 mm)
6961200	Spacer 27 mm
6961500	Spacer f/transportation tap 4 motor
6973080	Unloader valve w/16.4 mm needle
6991800	Gasket 12x22x7 mm
7012000	Piston f/safety valve
7023000	Hose tail nipple 1/4”

7024000	Double nipple 1/4” L= 26 mm
7070500	Connection piece f/non-return valve model 12
7070600	Connection piece f/non-return valve model 12-25
7071000	T-piece 1/8”
7071400	T-piece Condor
7071400	T-piece Condor
7080010	Distributor 6 way f/18-40
7084000	Adaptor f/36-90
7110000	Screw f/pressure control valve
7140000	Housing f/pressure control valve
7156000	Extension piece f/cock short
7156100	Extension piece f/cock long
7157001	Extension piece w/through 1/4”
7164200	Cross connector
7164900	Plug 1” f/inspection
7166033	Plug 1 1/2” f/inspection ASME
7166800	Plug 2” galvanized
7172800	Spacer f/600-40/50B
7172820	Spacer f/2x600
7180000	Elbow 1/4” int./ext. KRG
7181002	Elbow 1/4” x 1/4” f/outlet
7190000	Elbow 1/8”
7190000	Elbow 1/8”
7525000	Hose tail f/coupling nut 1/4”
7525000	Hose tail f/coupling nut 1/4”
7525000	Hose tail f/coupling nut 1/4”
7525000	Hose tail f/coupling nut 1/4”
7562000	Nipple f/pressure control valve
7566000	Bushing 1/4” x 1/4”
7566200	Bushing 1/4” x 1/4” L = 35 mm
7567100	Bushing 1/2” x 1/4”
7573000	Nut f/rib cover 6 motor
7573500	Nut f/rib cover 3 motor
7575000	Coupling nut 1/4”
7575000	Coupling nut 1/4”
8105001	Bracket f/2xM3, 2xM4, 2xM6, 2xOF302, OF302, 1000, 2000 15-25l, painted
8110601	Motor foundation f/36-150, painted
8111501	Motor foundation f/12-40, painted
8111611	Motor foundation f/3x6, 4x3, 4x4, 4xOF302, 4x6, 2x1000, 2x2000-40, painted
8132000	Mounting bracket f/fan

Motor spare parts model 6

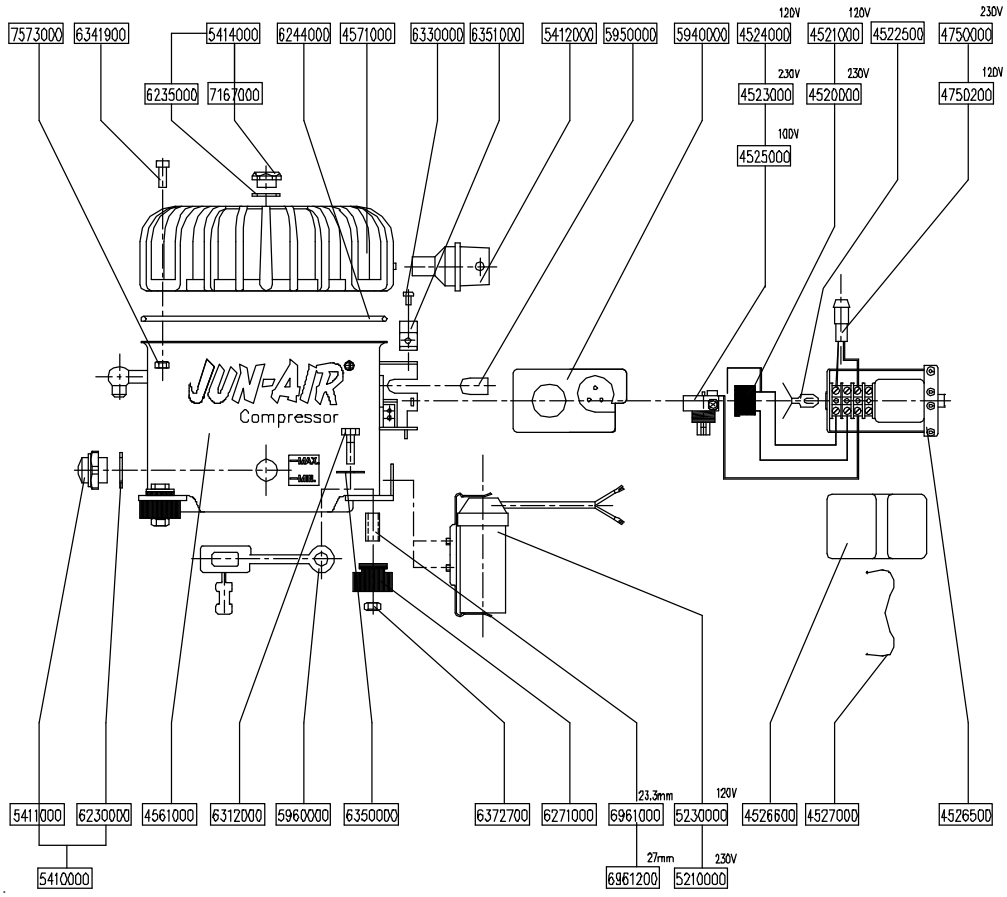

0015100

Motor spare parts model 6

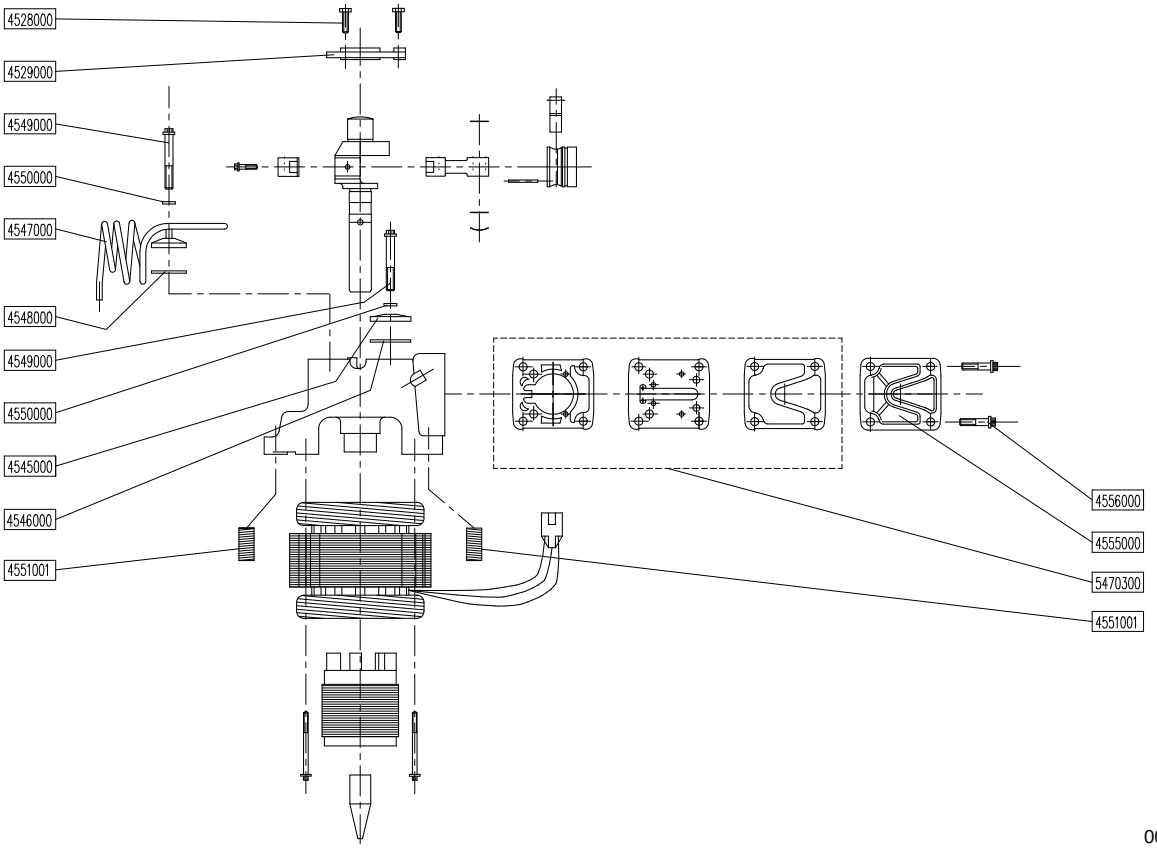

0015200

Spare parts model 18-40

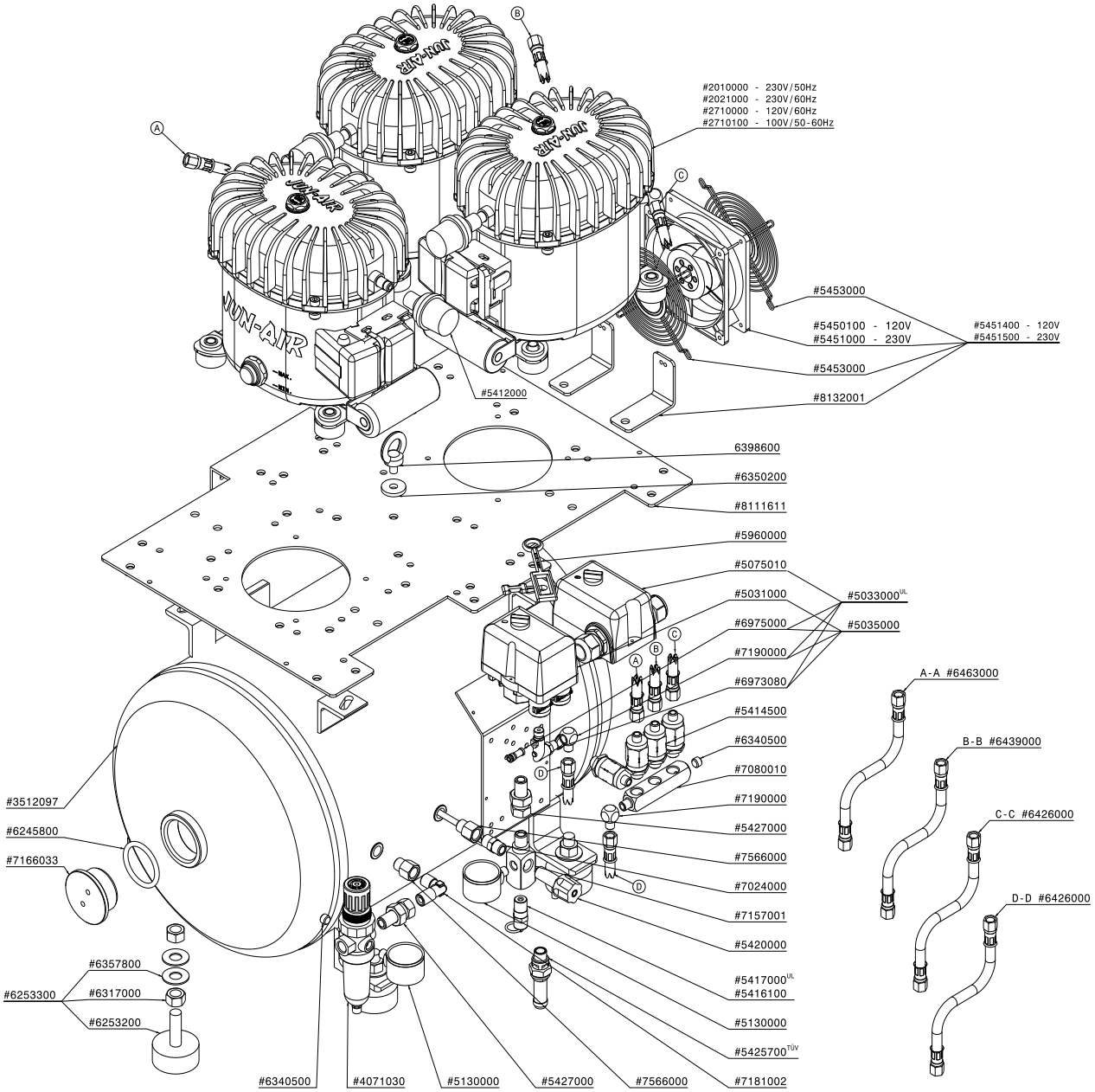

0200660

Accessories

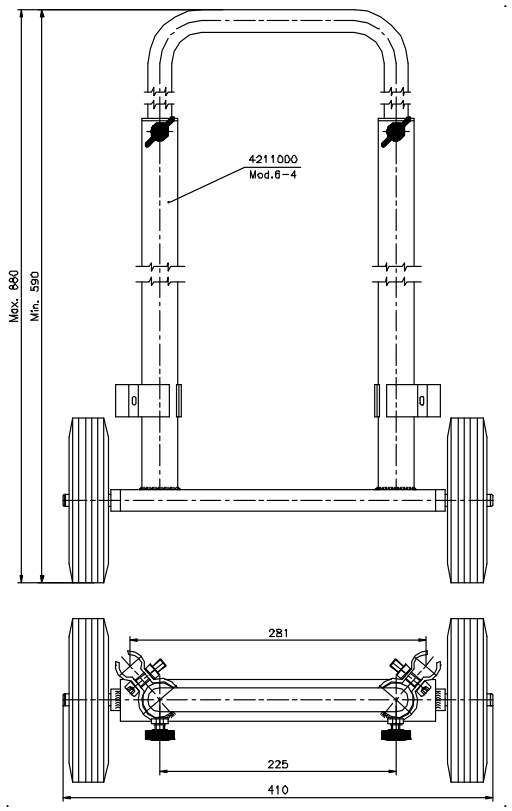

0991040

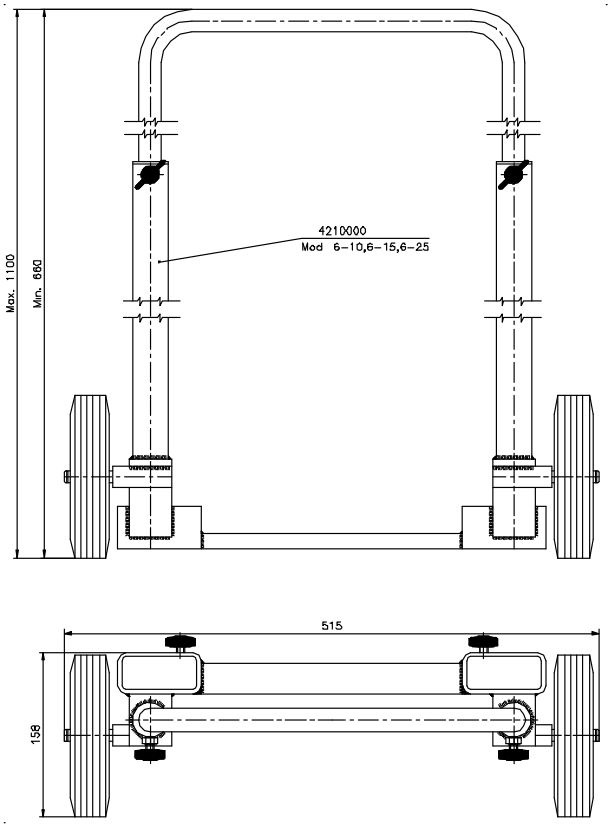

0991041

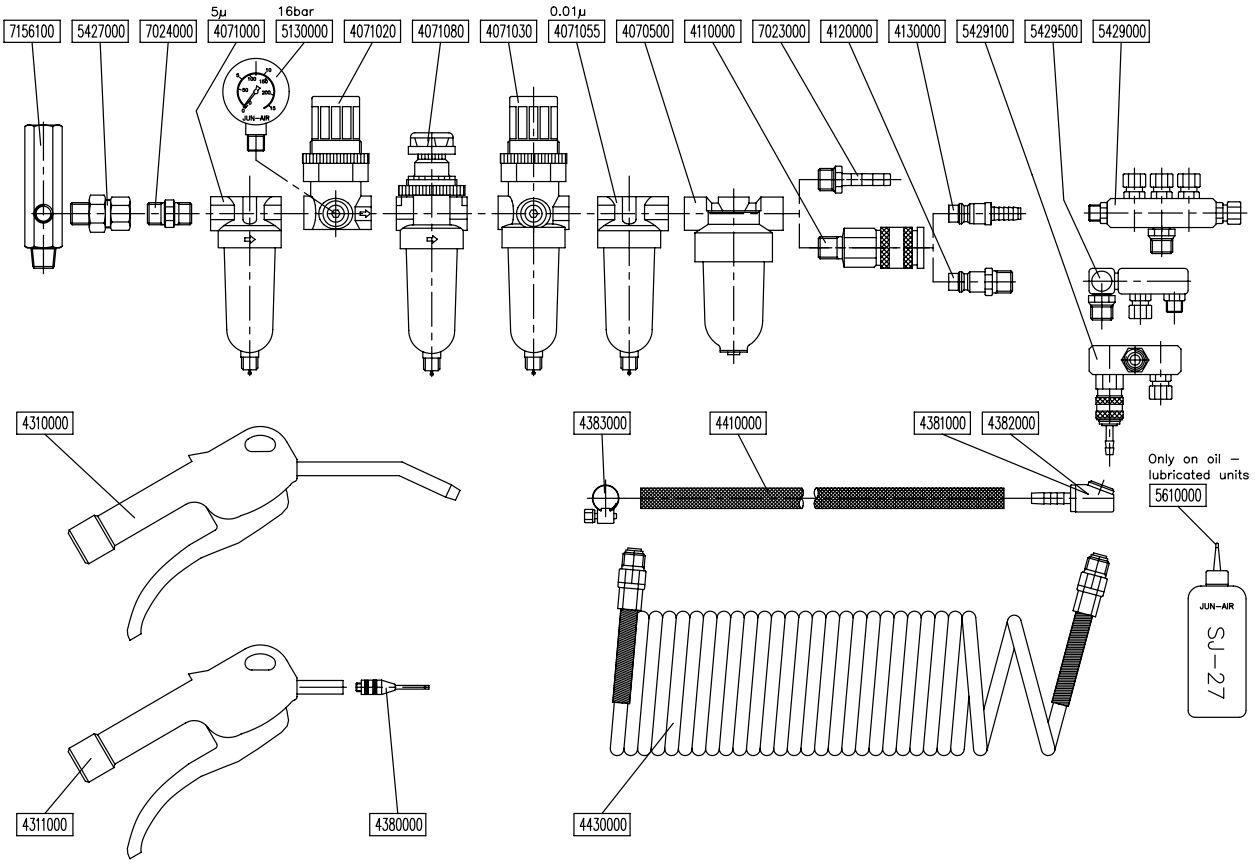

0015900