CSA

CYKLOP INTERNATIONAL

IT

MANUALE DI INSTALLAZIONE USO E MANUTENZIONE

NL

HANDLEIDING VOOR INSTALLATIE, GEBRUIK EN ONDERHOUD

211/212

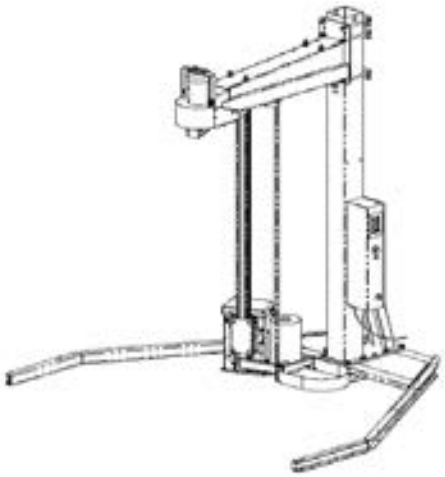

ADVANCED AUTO

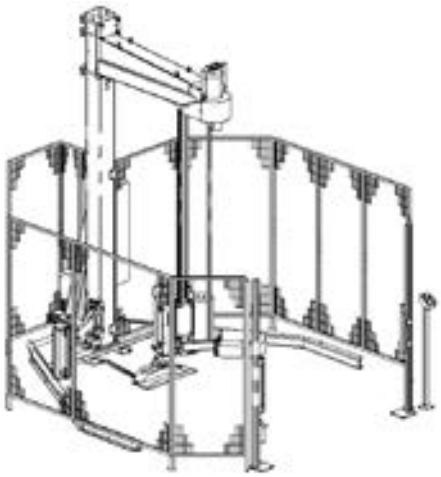

915

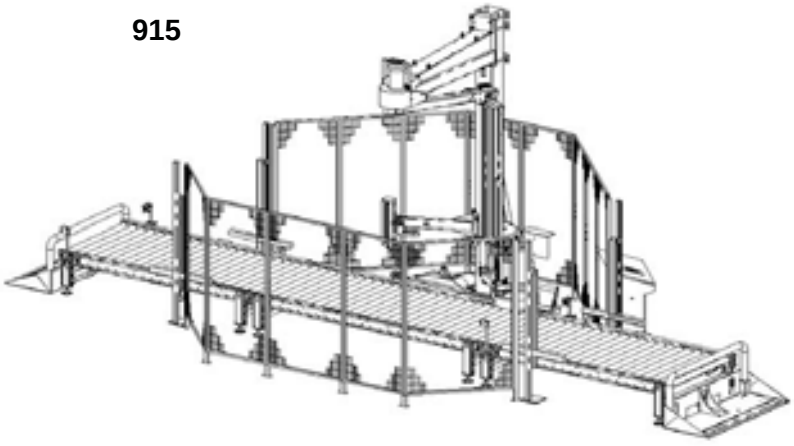

Codice / **Code handleiding**	**12000022508**

Revisione / **Revisie**	**00**

Edizione / **Versie**	**-**

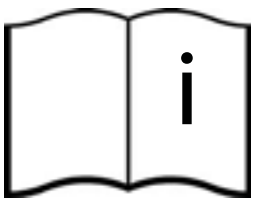

Istruzioni originali in lingua italiana
Leggere con attenzione e conservare per futuri riferimenti.

Vertaling van de originele instructies
Aandachtig lezen en Voor latere raadpleging bewaren.

SCHEMA PNEUMATICO MACCHINA STD

PNEUMATISCHE SCHEMA MACHINE STD

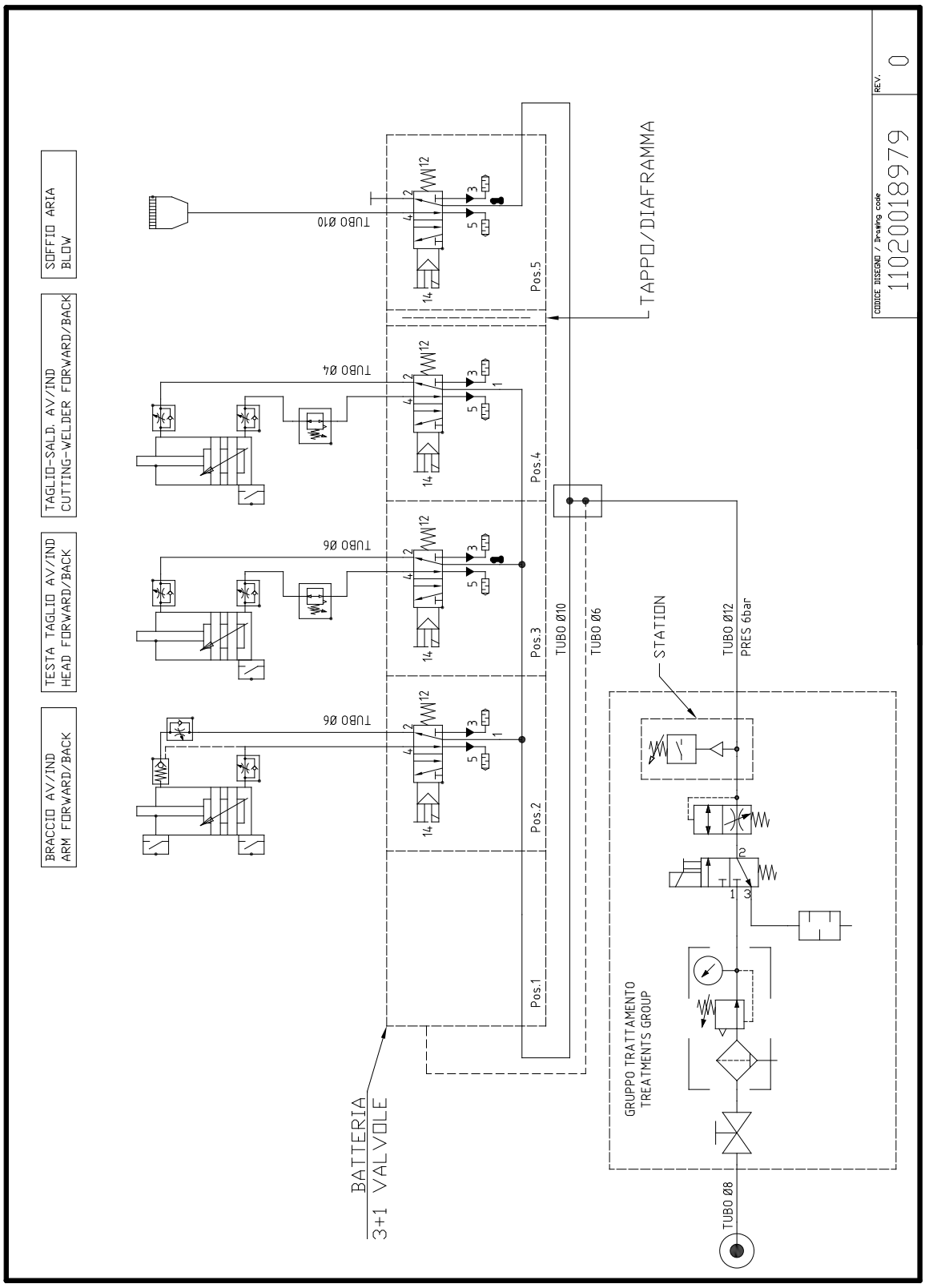

CATALOGO RICAMBI

1 GRUPPO BASAMENTO

Basamento colonna 2000	10010022160
Basamento colonna 2500	10010022157
Basamento colonna 3000	10010019986

2 GRUPPO BRACCIO

Braccio orizzontale rotante	10010016225
Distributore	10020017147

3 GRUPPO COLONNA

Colonna 1500 verticale	10010018736
Colonna 2000 verticale	10010016226
Colonna 2500 verticale	10010016405
Carrello scorrimento	10010016347

4 GRUPPO CARRELLI PRESTIRO

Carrello FE	10010005638
Struttura FE	10010000280
Carrello PRS	10010012378
Carrello PS	10010012379
Struttura (PRS - PS)	10010008620
Impianto elettrico carrello	10020012381
Gruppo stringifascia	10010009937
Gruppo stringifascia	10010007386

5. BANDELLA ANTICOLLISIONE 10010015493

6 GRUPPO PINZA 10010015041

7. GRUPPO TAGLIO

Braccio taglio	10010018455
Impianto pneumatico	10030018520
Saldatore	10010010476

8 CATALOGUS VERVANGSTUKKEN

1 SOKKELS

Std grondplaat Ø 2000	10010022160
Std grondplaat Ø 2500	10010022157
Std grondplaat Ø 3000	10010019986

2 ARMGROEP

Roterende horizontale arm	10010016225
Verdeler	10020017147

3 KOLOM GROEP

Vertikale mast 1500	10010018736
Vertikale mast 2000	10010016226
Vertikale mast 2500	10010016405
Geleidings wagen	10010016347

3 GROEP PRESTRETCH WAGENS

Wagen FE	10010005638
Structuur FE	10000000280
Wagen PRS	10010012378
Wagen PS	10010012379
Structuur (PRS - PS)	10010008620
Elektrische installatie wagen	10020012381
Groep omsnoering	10010009937
Groep omsnoering	10010007386

5 BOTSINGWERENDE RIEM 10010015493

6 *GROEP TANG* 10010015041

7 *GROEP NIJDEN*

Snijarm	10010018455
Pneumatische installatie	10030018520
Lasapparaat	10010010476

GRUPPO PRESSORE

8.Guida pressore 10010017170
9.Piatto pressore 10010004165

PROTEZIONI

10. RECINZIONI IN RETE

11. BARRIERA 10020019300

DRUKPLAATGROEP

8 Geleider aandrukker 10010017170
9 Drukplaat 10010004165

10. BESCHERMINGEN

11 BARRIÈRES 10020019300

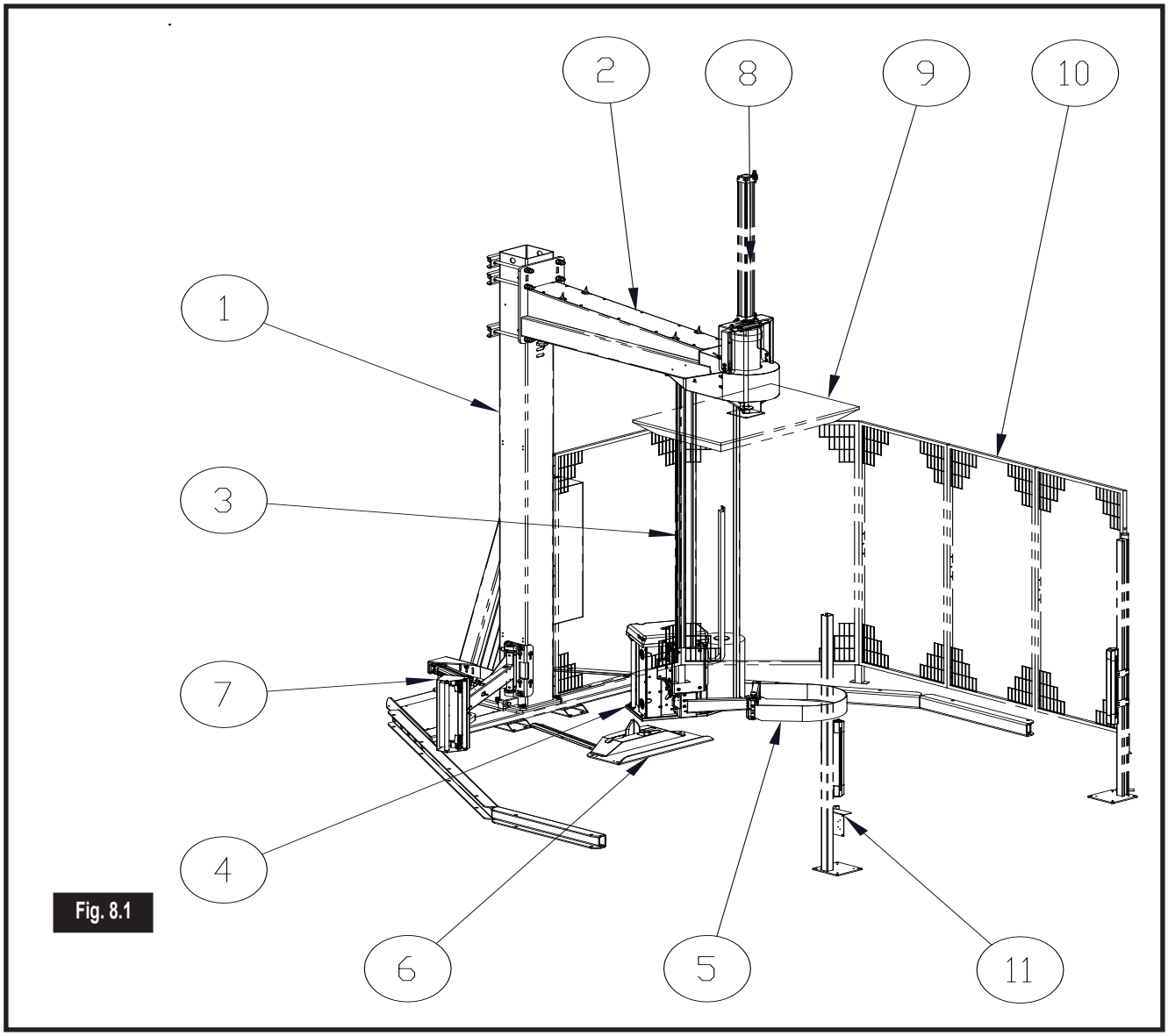

Fig. 8.1

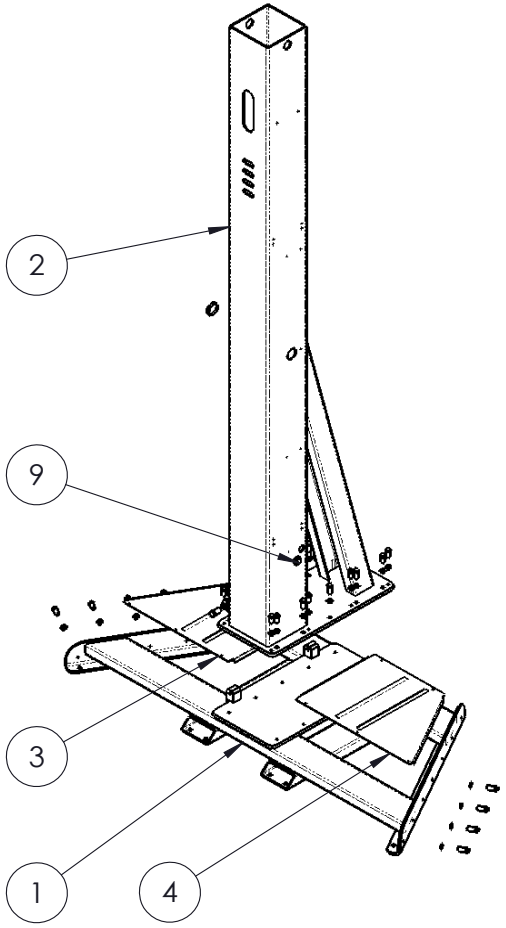

Pos	Qtà	CODICE
9	1	40300006896
4	1	10000016229
3	1	10000016230
2	1	10000022161
1	1	10000015379

10010022160

GRUPPO BASAMENTO - BASAMENTO COLONNA 2000

STD GRONDPLAAT Ø 2000

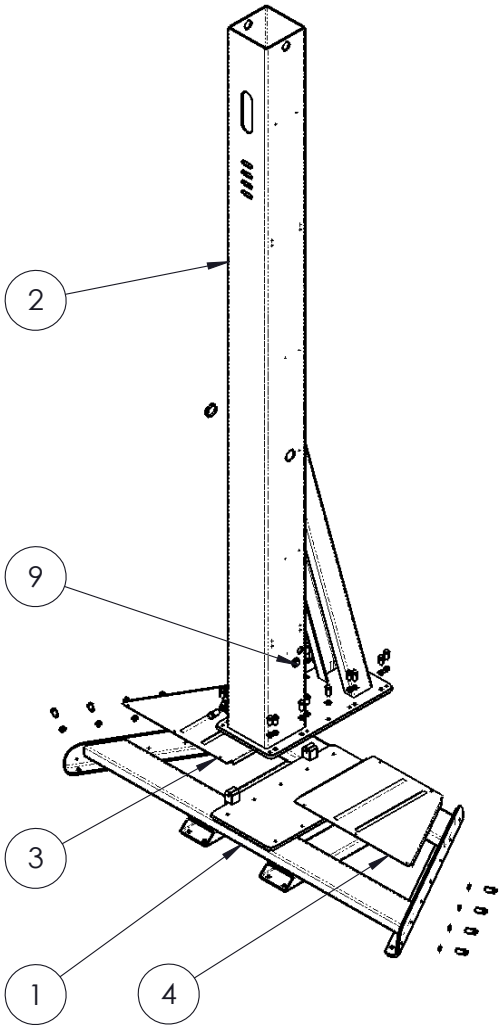

Pos	Qtà	CODICE
9	1	40300006896
4	1	10000016229
3	1	10000016230
2	1	10000022158
1	1	10000015379

10010022157

BASAMENTO COLONNA 2500

STD GRONDPLAAT Ø 2500

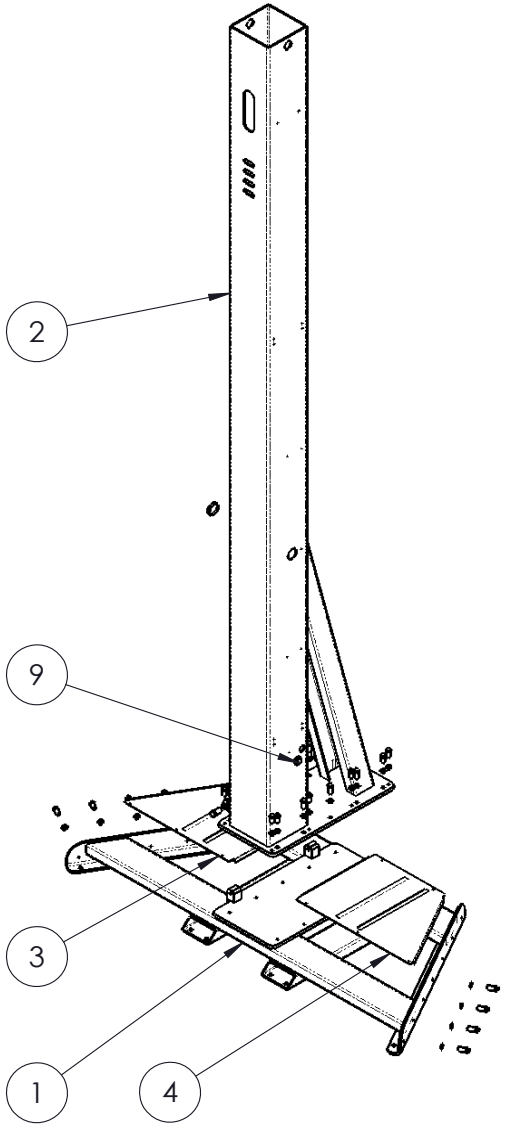

Pos	Qtà	CODICE
9	1	40300006896
4	1	10000016229
3	1	10000016230
2	1	10000019987
1	1	10000015379

10010019986

BASAMENTO COLONNA 3000

STD GRONDPLAAT Ø 3000

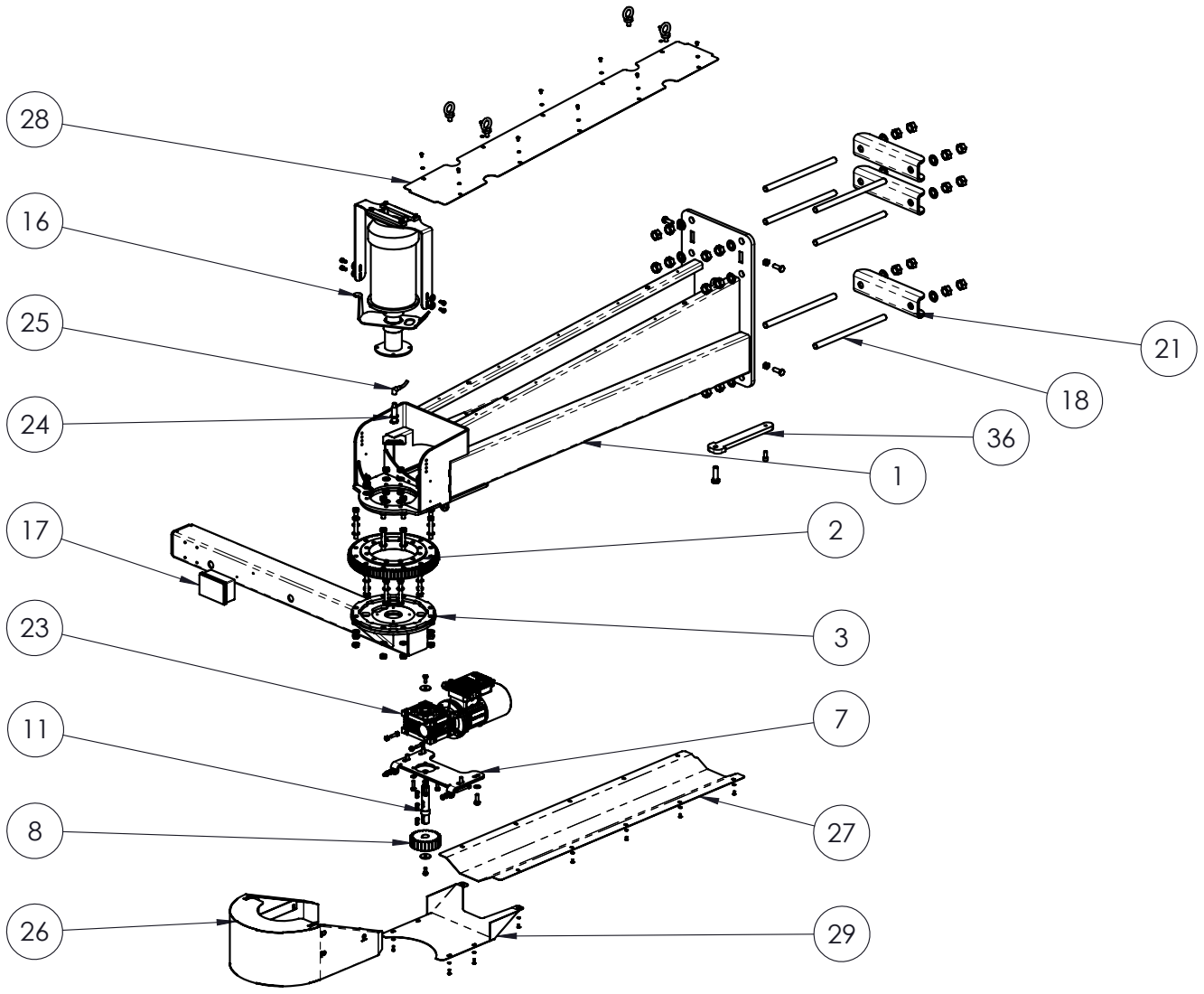

Pos	Q.TA'	CODICE
36	1	10000017832
29	1	10000016300
28	1	10000016299
27	1	10000016298
26	1	10000016295
25	1	82425000147
24	1	82410008735
23	1	20915016397
21	3	10000016204
18	6	10000016205
17	1	80200003319
16	1	10010017147
11	1	10000015419
8	1	10000015409
7	1	10000015408
3	1	10000015406
2	1	20430011765
1	1	10000015395

10010016225

GRUPPO BRACCIO - BRACCIO ORIZZONTALE ROTANTE

ARMGROEP-ROTERENDE HORIZONTALE ARM

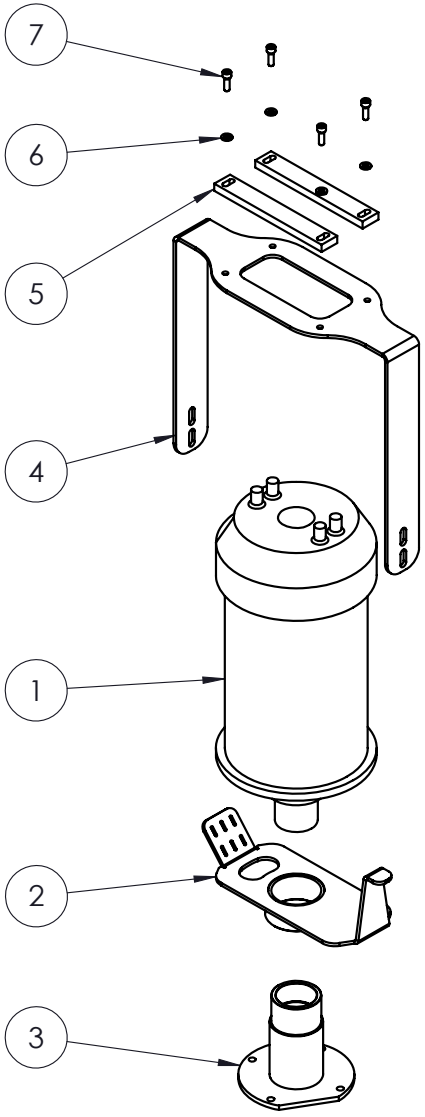

Pos.	Q.ty	Cod.
7	4	20500000580
6	4	20520000099
5	2	10000017889
4	1	10000017148
3	1	10000005896
2	1	10000016087
1	1	82440004834

10010017147

DISTRIBUTORE

VERDELER

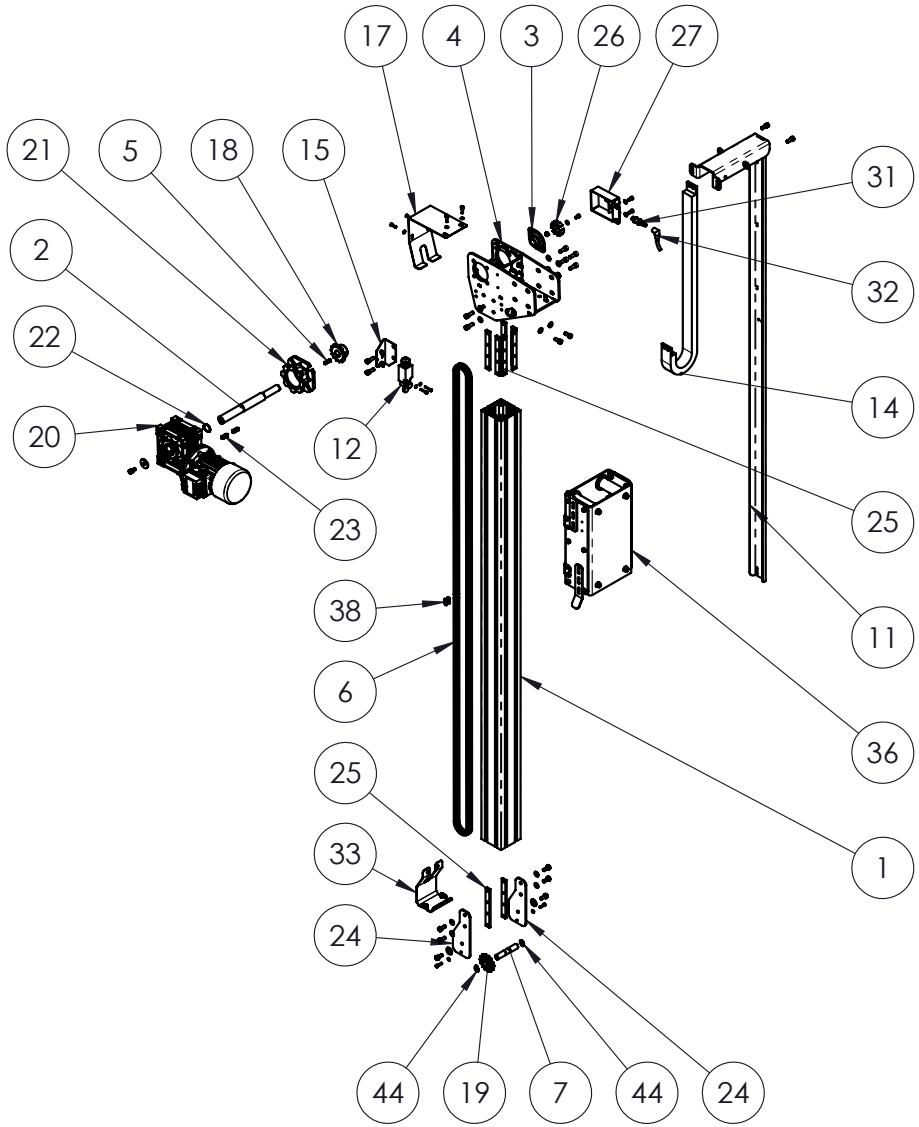

Pos	Q.tà	CODICE
44	2	20525010445
38	1	20315000605
36	1	10010016347
33	1	10000016233
32	1	82425000147
31	1	82410001118
27	1	10000016222
26	1	10000010060
25	8	10000001962
24	2	10000015475
23	2	20530001519
22	1	20525000089
21	1	20930016400
20	1	20915011287
19	1	20345000522
18	1	10000000549
17	1	10000016194
15	1	10000016394
14	1	82215018741
12	1	82400000556
11	1	10000018740
7	1	10000015471
6	1	20315018738
5	1	20530000084
4	1	10000015426
3	1	20450002410
2	1	10000015427
1	1	10000018737

10010018736

GRUPPO COLONNA - COLONNA 1500 VERTICALE

KOLOM GROEP -VERTIKALE MAST 1500

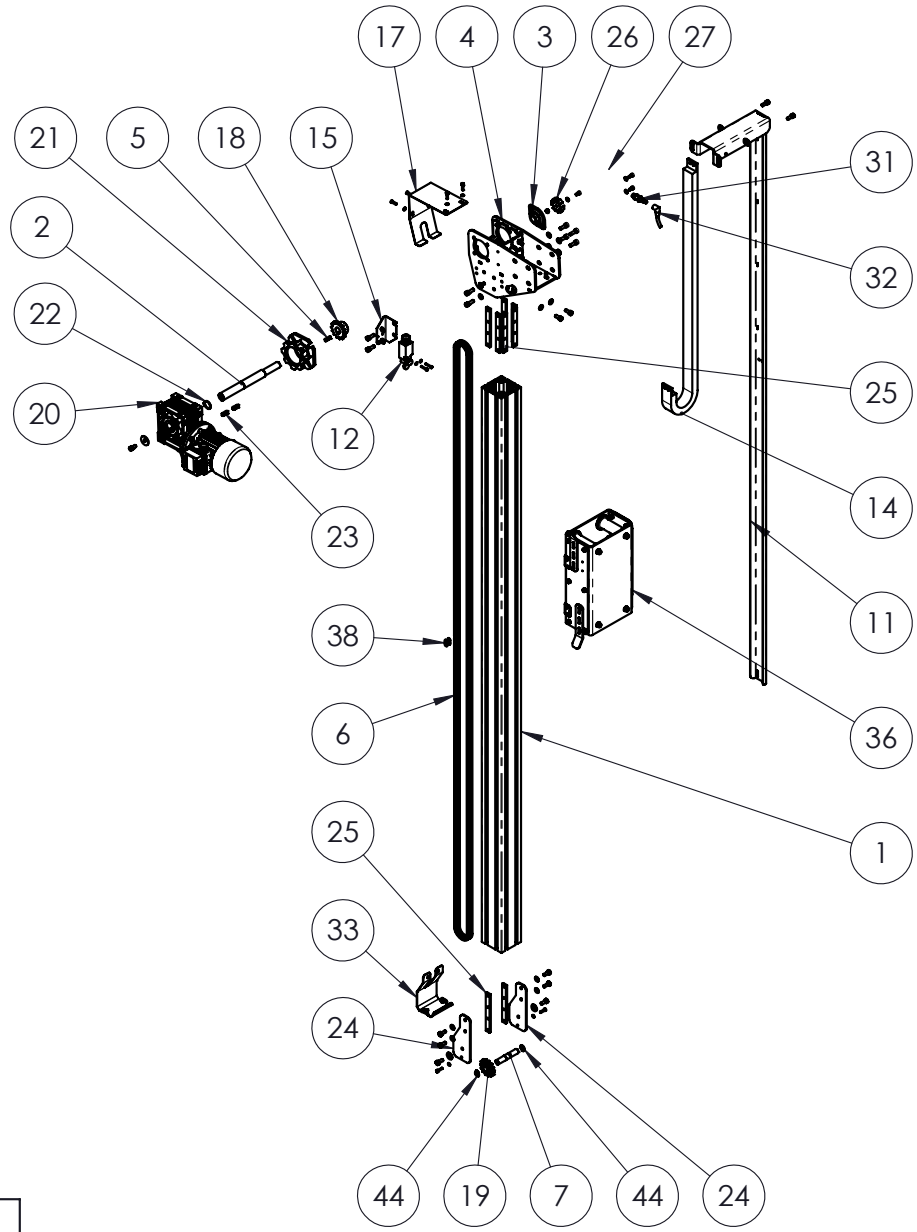

Pos	Q.tà	CODICE
44	2	20525010445
38	1	20315000605
36	1	10010016347
33	1	10000016233
32	1	82425000147
31	1	82410001118
27	1	10000016222
26	1	10000010060
25	8	10000001962
24	2	10000015475
23	2	20530001519
22	1	20525000089
21	1	20930016400
20	1	20915011287
19	1	20345000522
18	1	10000000549
17	1	10000016194
15	1	10000016394
14	1	82215011746
12	1	82400000556
11	1	10000016064
7	1	10000015471
6	1	20315015434
5	1	20530000084
4	1	10000015426
3	1	20450002410
2	1	10000015427
1	1	10000004482

10010016226

COLONNA 2000 VERTICALE

KOLOM GROEP -VERTIKALE MAST 2000

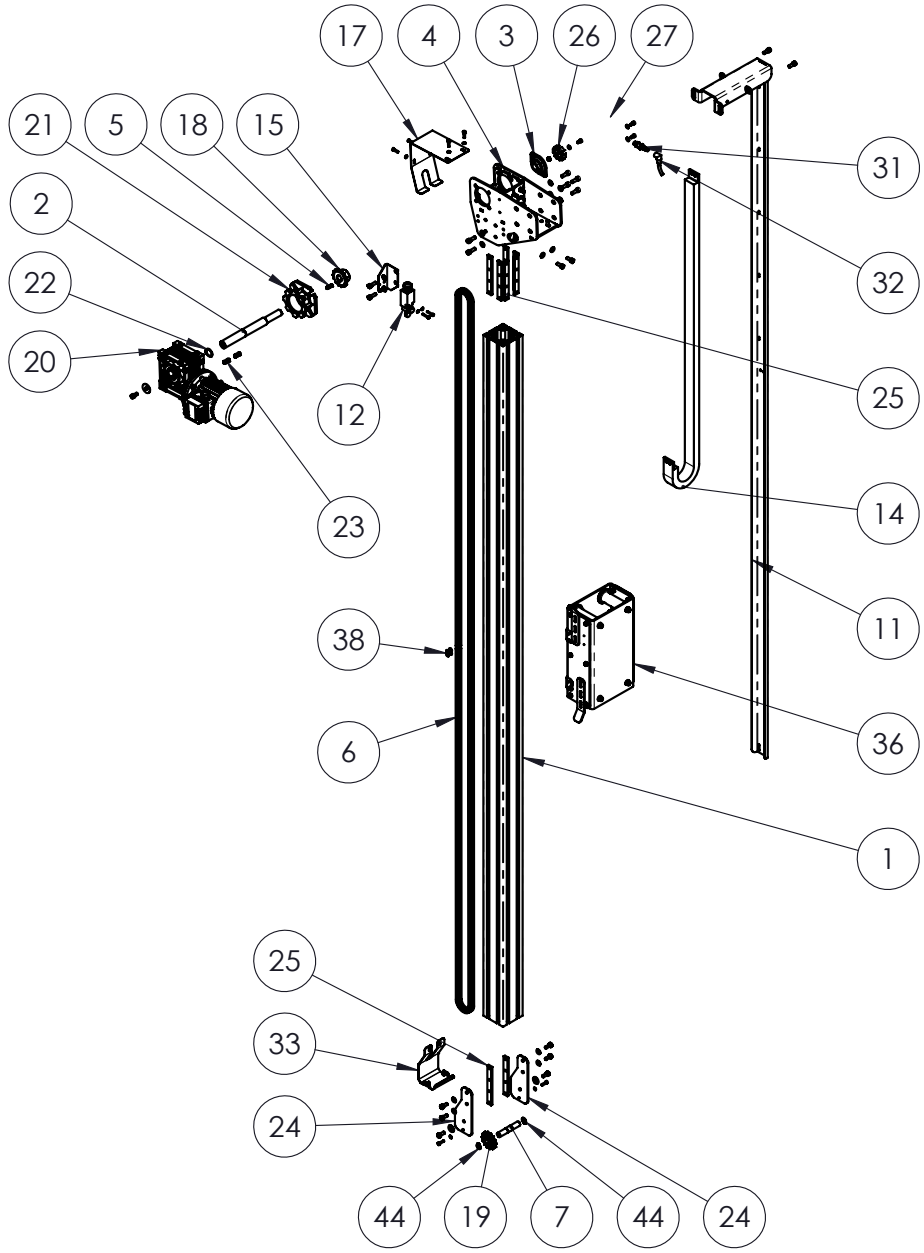

Pos	Q.tà	CODICE
44	2	20525010445
38	1	20315000605
36	1	10010016347
33	1	10000016233
32	1	82425000147
31	1	82410001118
27	1	10000016222
26	1	10000010060
25	8	10000001962
24	2	10000015475
23	2	20530001519
22	1	20525000089
21	1	20930016400
20	1	20915011287
19	1	20345000522
18	1	10000000549
17	1	10000016194
15	1	10000016394
14	1	82215012121
12	1	82400000556
11	1	10000016406
7	1	10000015471
6	1	20315016409
5	1	20530000084
4	1	10000015426
3	1	20450002410
2	1	10000015427
1	1	10000016408

10010016405

COLONNA 2500 VERTICALE

KOLOM GROEP -VERTIKALE MAST 2500

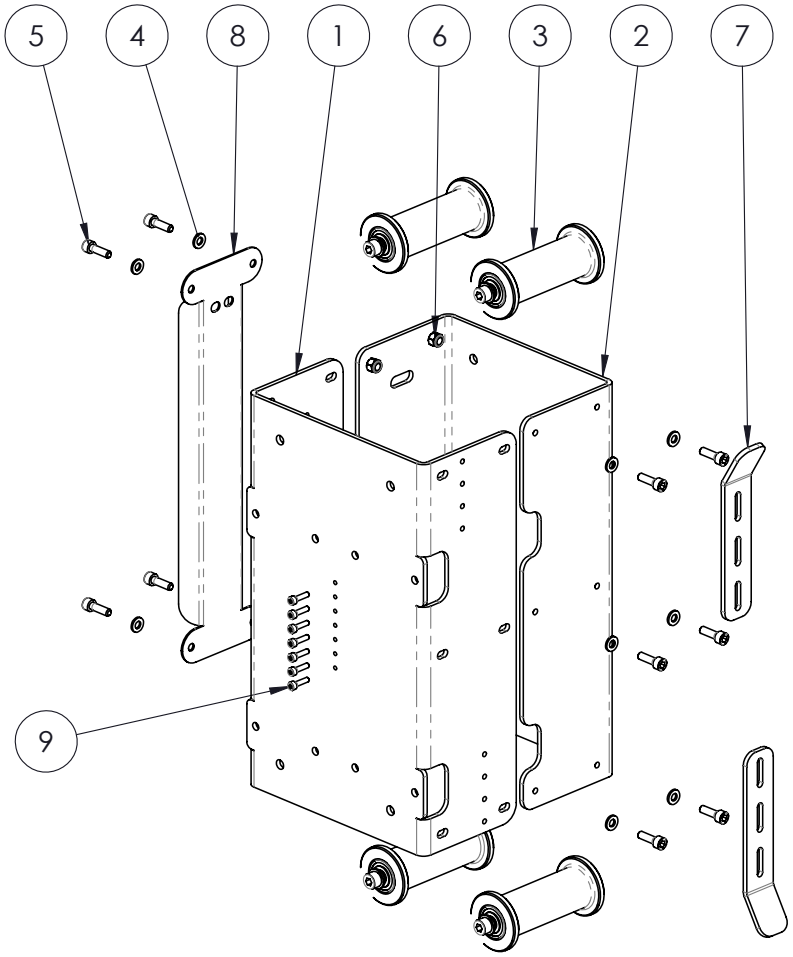

Pos	Qtà	CODICE
9	7	20500010171
8	1	10000016368
7	2	10000016189
6	12	20510000126
5	12	20500000580
4	12	20520000099
3	4	10010000172
2	1	10000015431
1	1	10000016348

10010016347

CARRELLO SCORRIMENTO

GELEIDINGS WAGEN

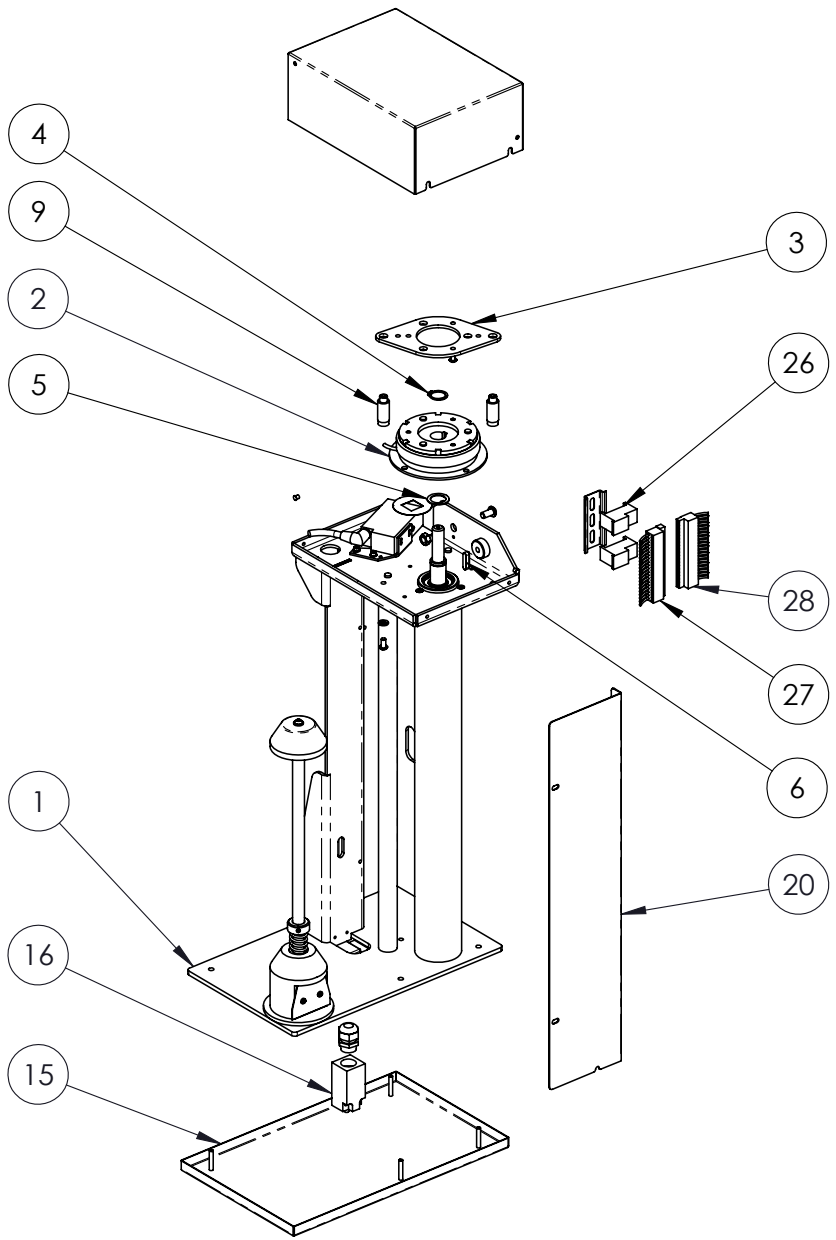

Pos	Q.ty	Code
28	1	82000012382
27	1	82000012383
26	2	82000012354
20	1	10000000048
16	1	82400000148
15	1	10000002173
9	2	10000000056
6	1	20530000084
5	1	20430000073
4	1	20525000088
3	1	10000000045
2	1	21010000076
1	1	10010000280

10010005638

GRUPPO CARRELLO PRESTIRO - CARRELLO FE

GROEP PRESTRETCH WAGENS- WAGEN FE

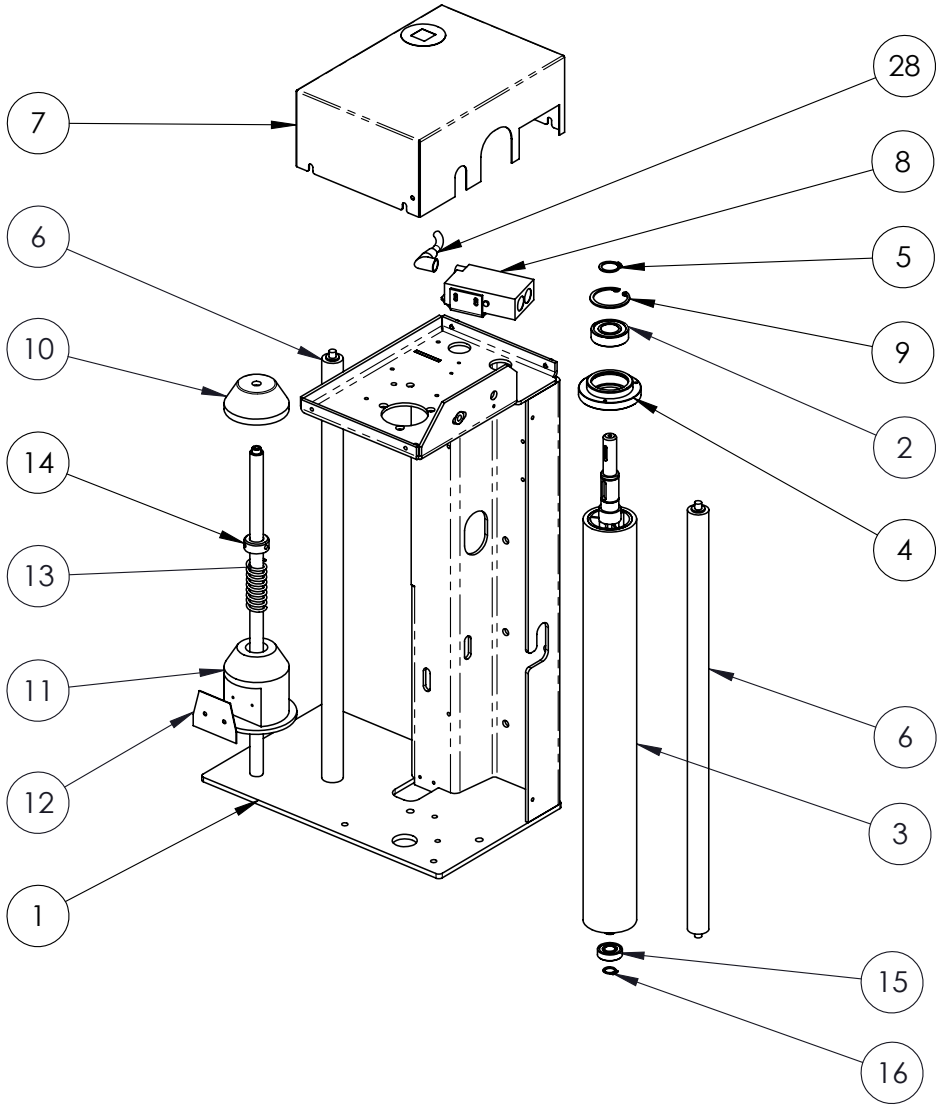

Pos	Q.ty	Code
28	1	82425000147
16	1	20525000087
15	1	20410000080
14	1	20545000078
13	1	10000000030
12	1	10000000035
11	1	10000000033
10	1	10000000034
9	1	20525000092
8	1	82415000146
7	1	10000000050
6	2	20600000071
5	1	20525000088
4	1	10000000044
3	1	10000000042
2	1	20410000079
1	1	10000000043

10010000280

STRUTURA FE

STRUCTUUR FE

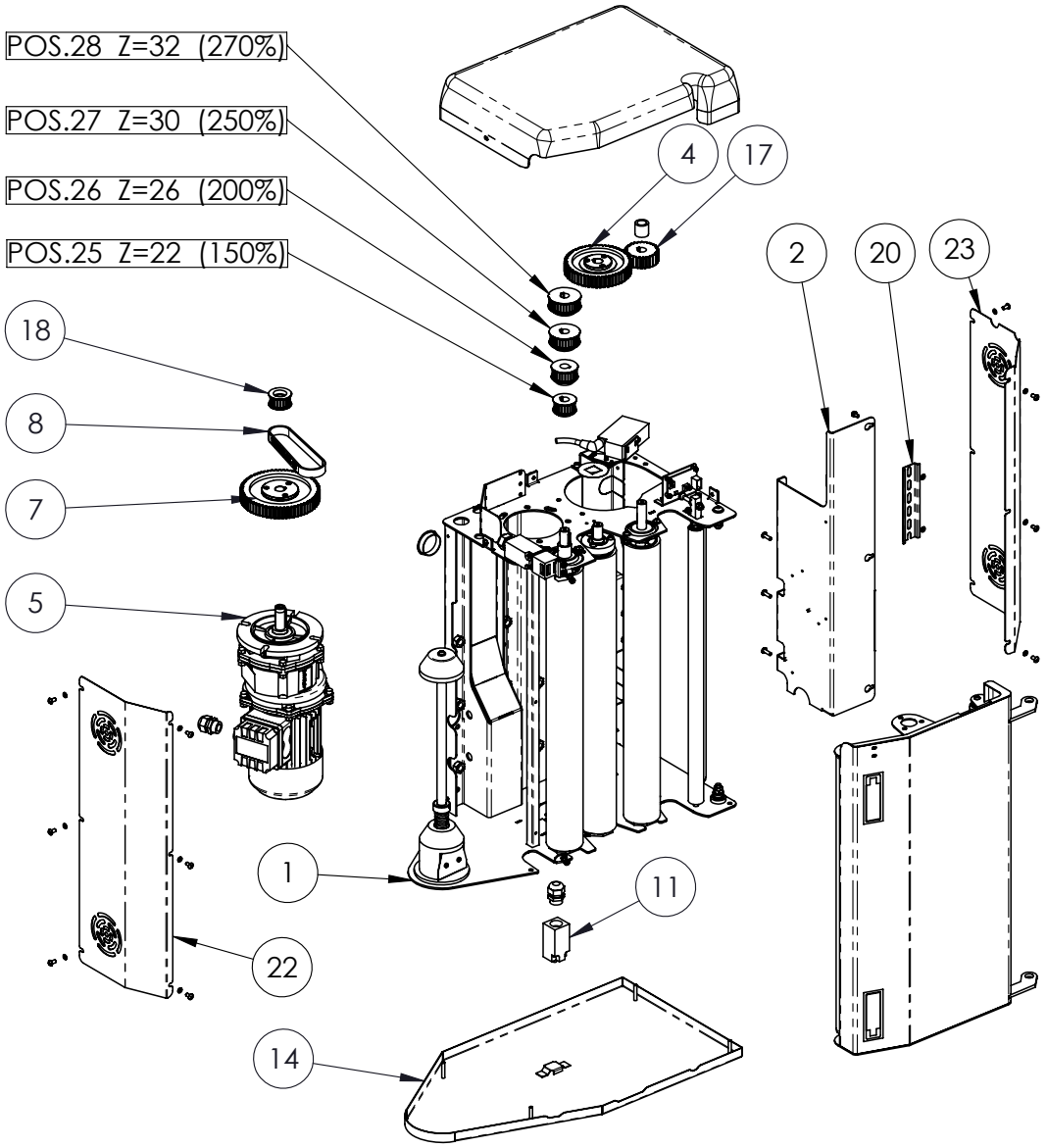

Pos	Q.ty	Code
28	1	10000003114
27	1	10000003115
26	1	10000002794
25	1	10000003116
23	1	10000003267
22	1	10000003266
21	2	20500010333
20	1	10000002482
18	1	10000002797
17	1	10000003112
14	1	10000003298
11	1	82400000148
8	1	20310002902
7	1	10000003109
5	1	20915009344
4	1	10000003110
2	1	10020012380
1	1	10010008620

10010012378

CARRELLO PRS

WAGEN PRS

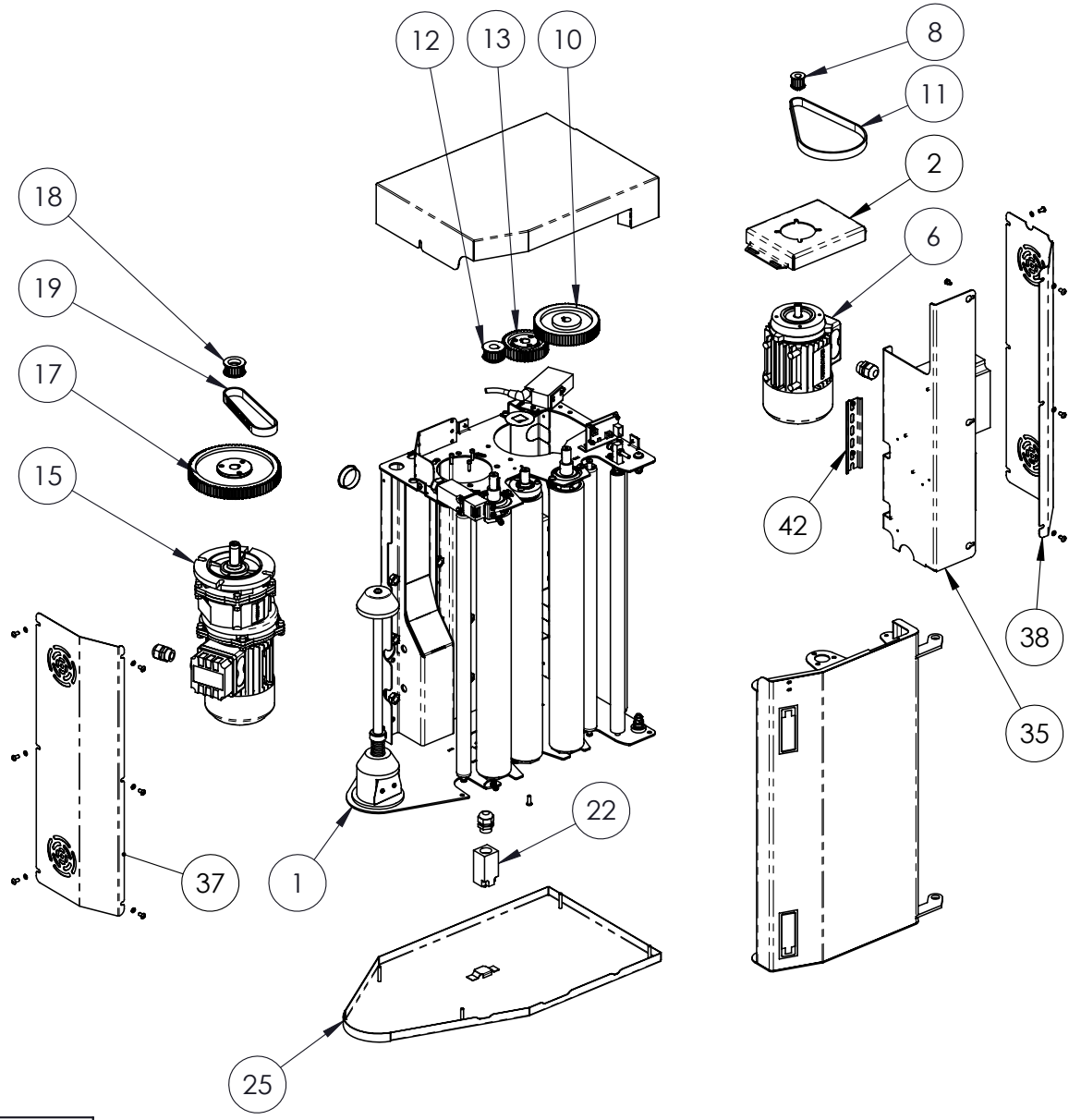

Pos	Q.tà	Code
42	1	10000002482
38	1	10000003267
37	1	10000003266
35	1	10020012381
25	1	10000003298
22	1	82400000148
19	1	20310002902
18	1	10000002797
17	1	10000002726
15	1	20915009344
13	1	10000002723
12	1	10000003116
11	1	20310002903
10	1	10000002720
8	1	10000002799
6	1	20800011303
2	1	10000003246
1	1	10010008620

10010012379

CARRELLO PS

WAGEN PS

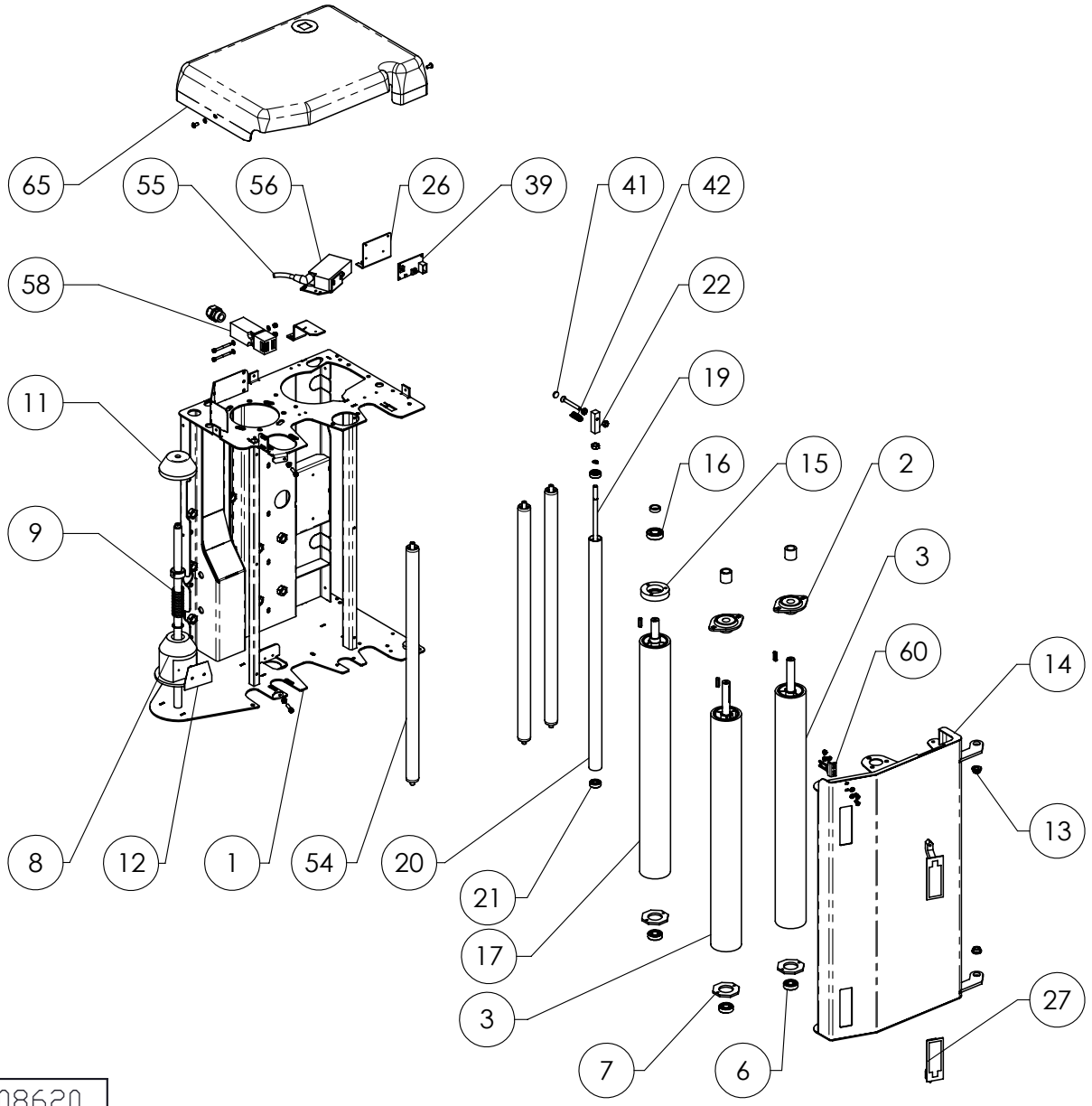

Pos	Q.ty	Code
65	1	10000005181
60	1	82405008594
58	1	82400000672
56	1	82415000146
55	1	82425000147
54	3	20600003321
42	1	10000002912
41	1	10000000198
39	1	81805000204
27	2	20110002872
22	1	10000002701
21	2	20410000082
20	1	10000002727
19	1	10000002728
17	1	10000003162
16	1	20410002893
14	1	10000008654
13	2	20440002896
12	1	10000000035
11	1	10000000034
9	1	10000000030
8	1	10000000033
7	3	10000002692
6	3	20410000080
3	2	10000003159
2	2	20450002877
1	1	10000008619

10010008620

STRUTURA (PRS-PS)

STRUCTUUR (PRS-PS)

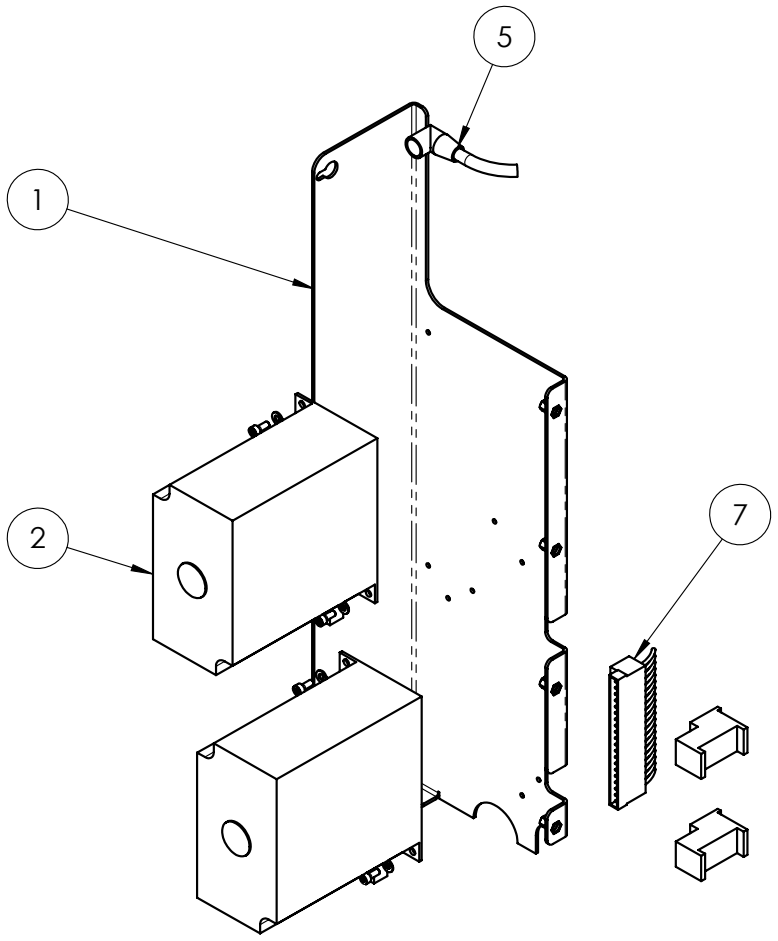

Pos.	Q.ty	Code
7	1	82000012383
5	1	82425000147
2	2	81005011700
1	1	10000008618

10020012381

IMPIANTO ELETTRICO CARRELLO

ELEKTRISCHE INSTALLATIE WAGEN

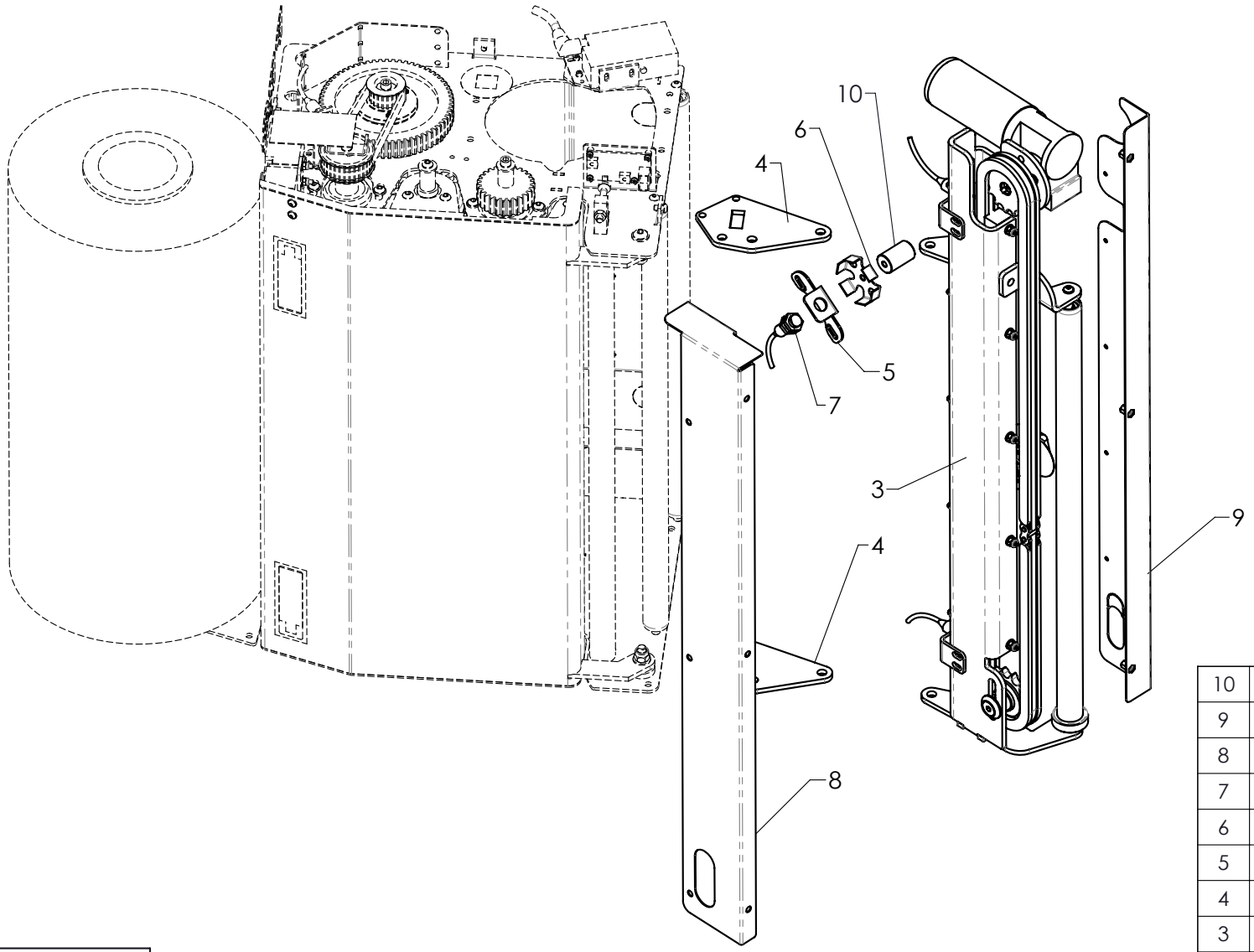

Pos.	Q.ty	Code
10	1	10000005084
9	1	10000011052
8	1	10000011053
7	1	82410003235
6	1	10000010060
5	1	10000020741
4	2	10000009928
3	1	10010007386

10010009937

GRUPPO STRINGIFASCIA

GROEP OMSNOERING

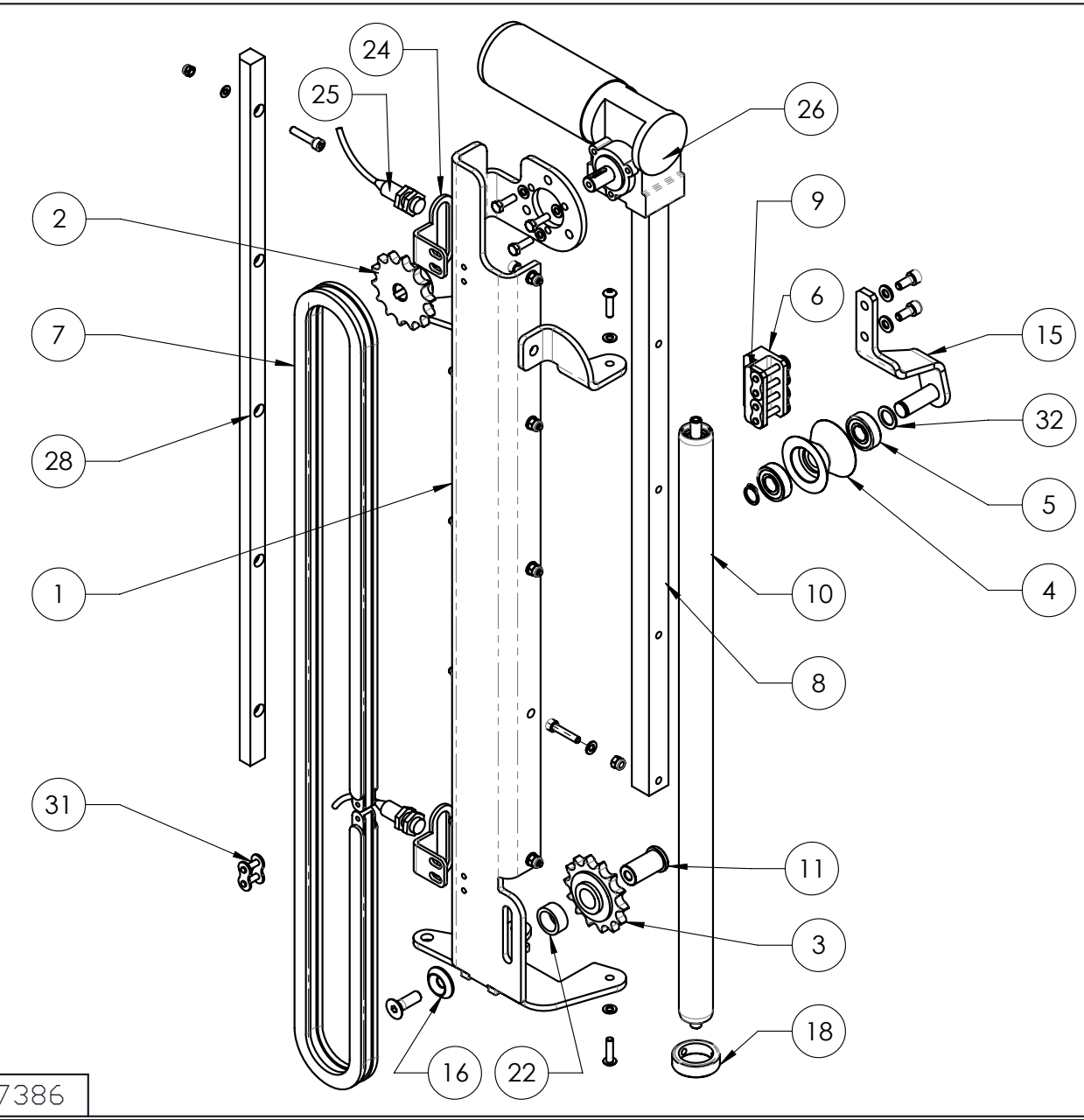

Pos.	Q.ty	Code
32	1	20400020075
31	1	20315000605
28	1	10000007640
26	1	20800007519
25	2	82410003235
24	2	10000007440
22	1	10000007431
18	1	10000007429
15	1	10000007404
11	1	10000007391
10	1	20600003321
9	2	20315002237
8	1	10000007393
7	1	20315007392
6	1	10000007394
5	2	20410000080
4	1	10000007389
3	1	20345000522
2	1	10000007390
1	1	10000007398

10010007386

GRUPPO STRINGIFASCIA

GROEP OMSNOERING

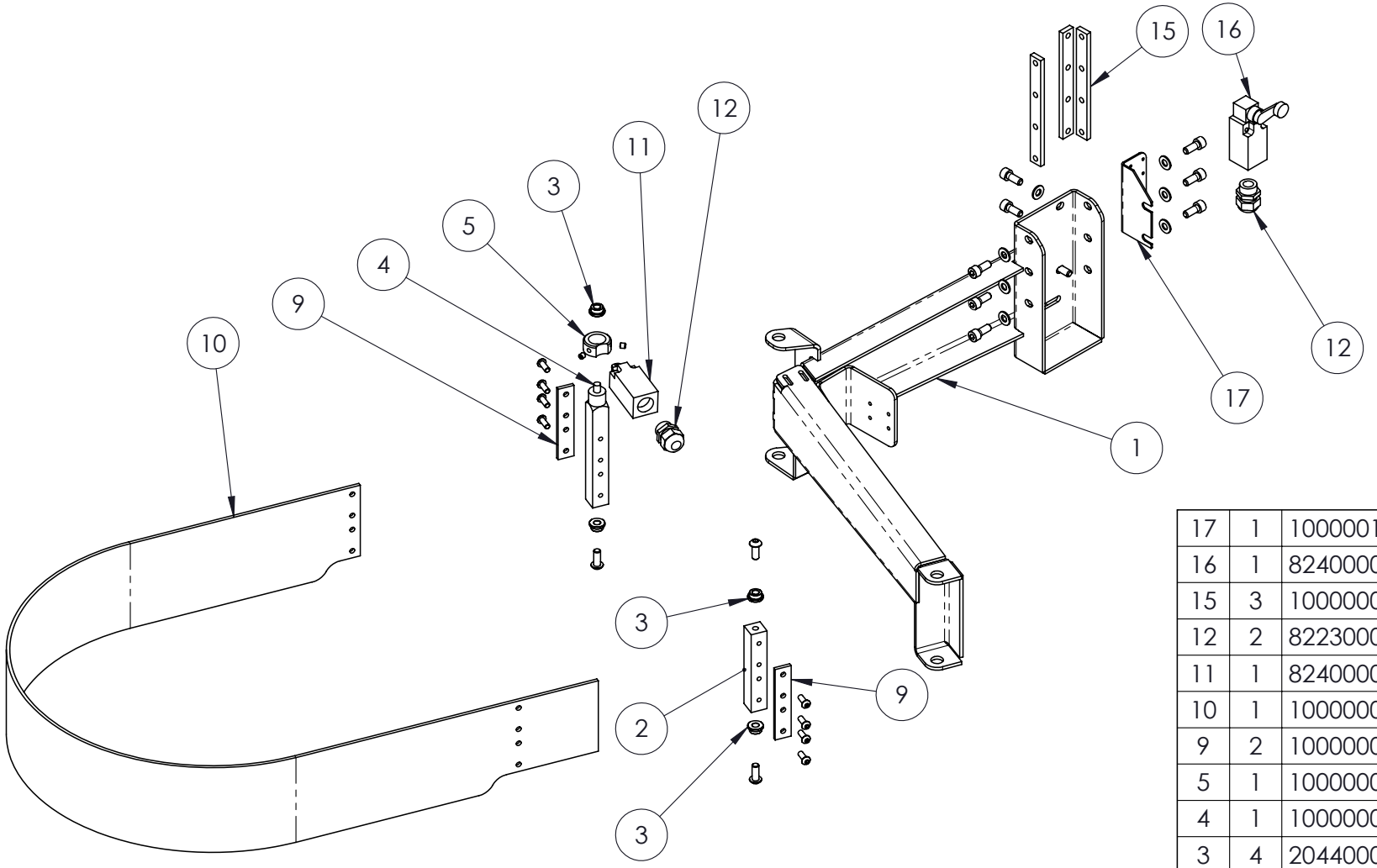

Pos	Qtà	CODICE
17	1	10000016394
16	1	82400000556
15	3	10000001962
12	2	82230000149
11	1	82400001119
10	1	10000005471
9	2	10000000971
5	1	10000001674
4	1	10000001671
3	4	20440002896
2	1	10000001672
1	1	10000015497

10010015493

BANDELLA ANTICOLLISIONE

BOTSINGWERENDE RIEM

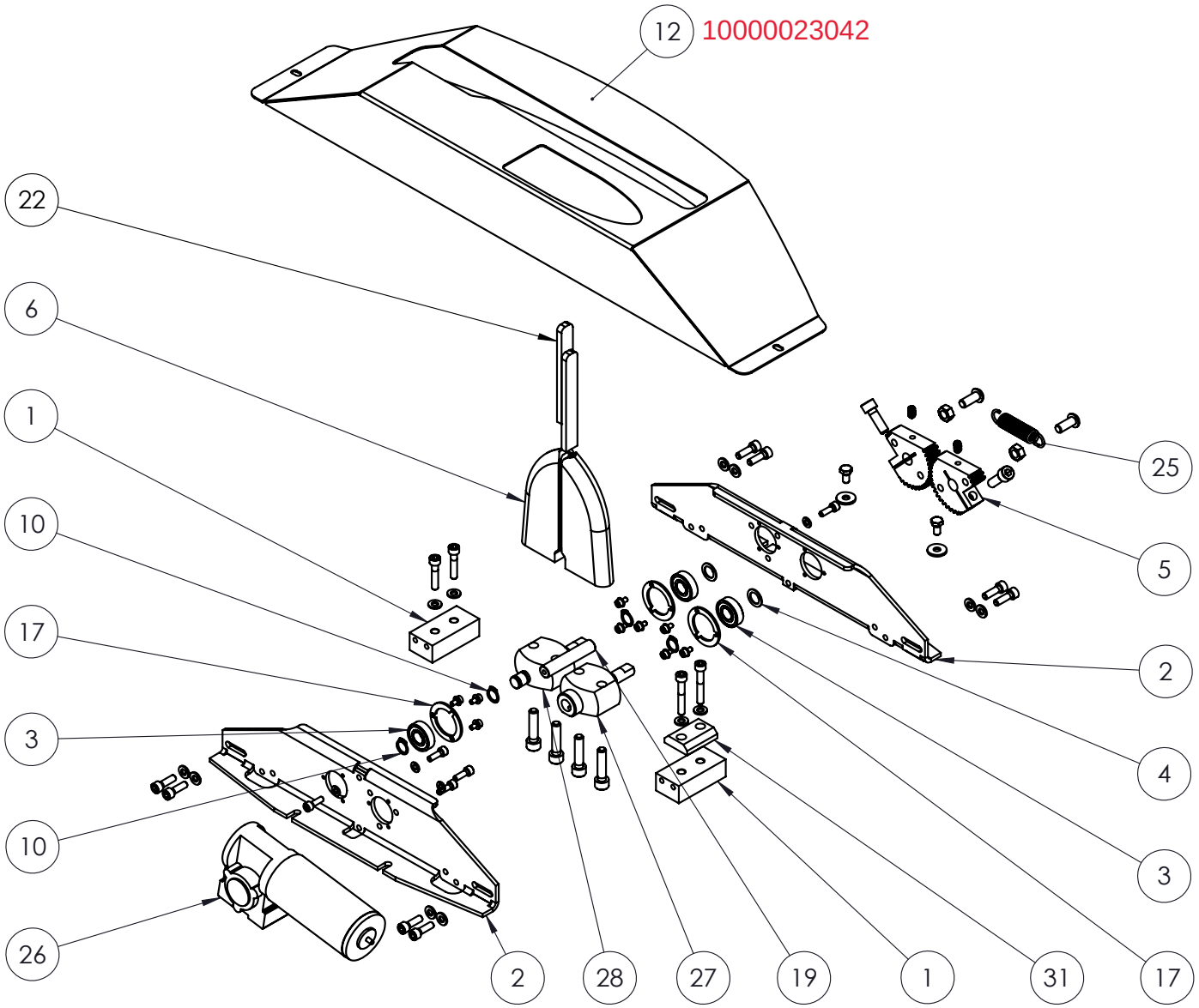

Pos	Q.ty	Code
31	1	10000017273
28	1	10000015051
27	1	10000015050
26	1	20800007519
25	1	21300012158
22	2	10000011574
19	1	10000011697
17	3	10000011603
12	1	~~10000015129~~
10	4	20525000087
6	2	10000012641
5	2	10000011572
4	2	20430001562
3	3	20410000080
2	2	10000011573
1	2	10000011680

10010015041

GRUPPO PINZA

GROEP TANG

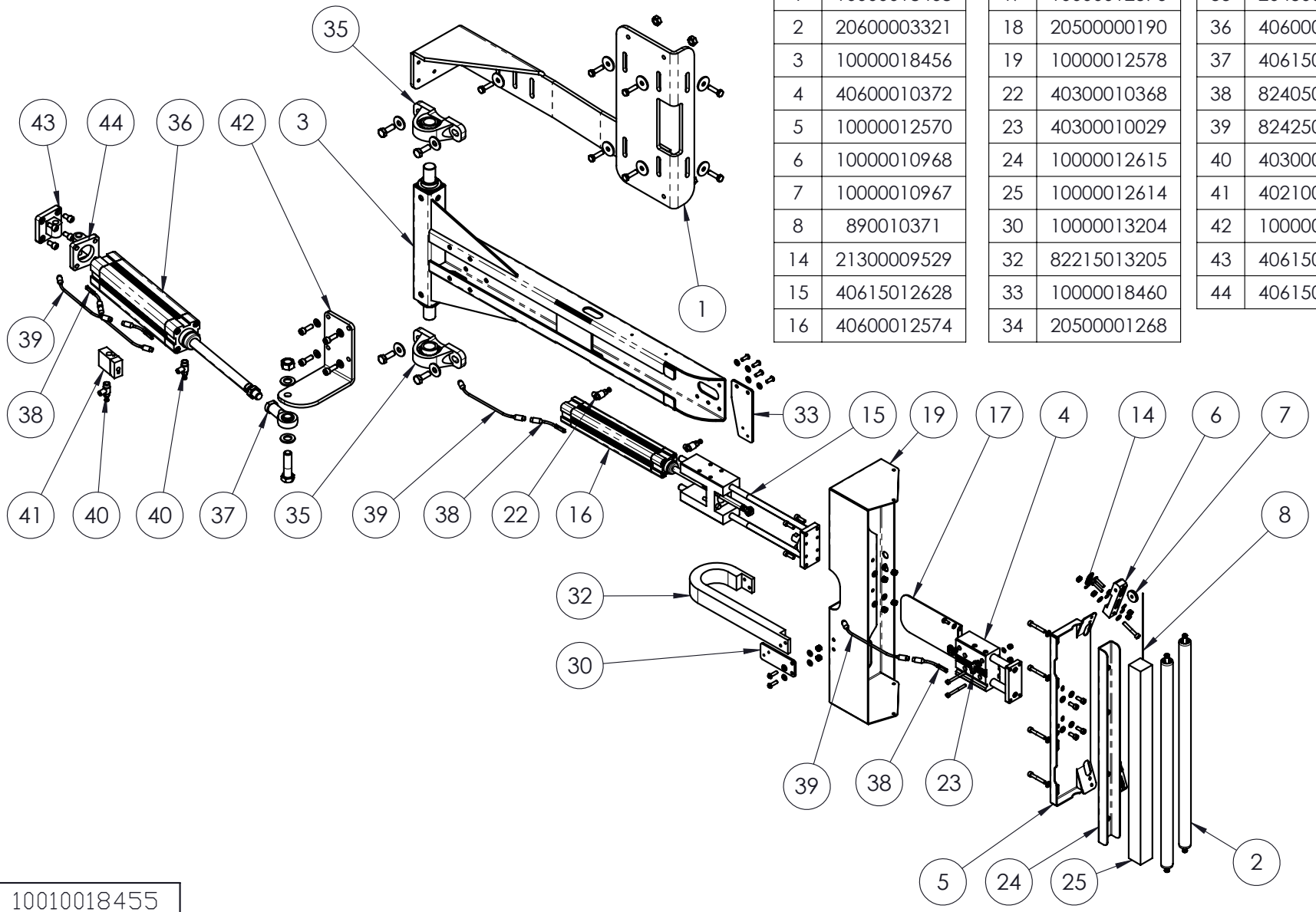

Pos.	Cod.
1	10000018468
2	20600003321
3	10000018456
4	40600010372
5	10000012570
6	10000010968
7	10000010967
8	890010371
14	21300009529
15	40615012628
16	40600012574

Pos.	Cod.
17	10000012576
18	20500000190
19	10000012578
22	40300010368
23	40300010029
24	10000012615
25	10000012614
30	10000013204
32	82215013205
33	10000018460
34	20500001268

Pos.	Cod.
35	20450006233
36	40600006793
37	40615001364
38	82405015910
39	82425018226
40	40300010369
41	40210010301
42	10000018465
43	40615010274
44	40615017576

10010018455

GRUPPO TAGLIO- BRACCIO TAGLIO

GROEP NIJDEN- SNIJARM

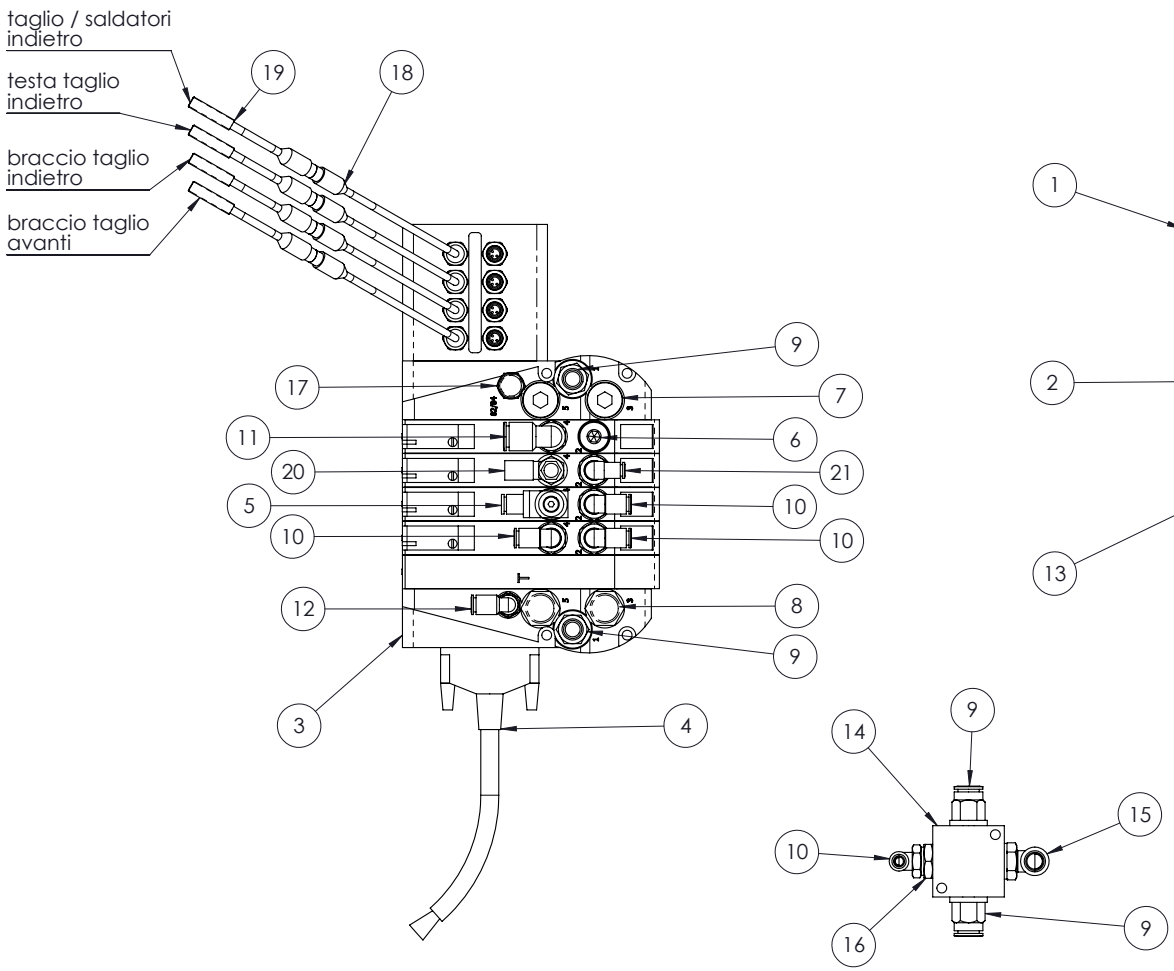

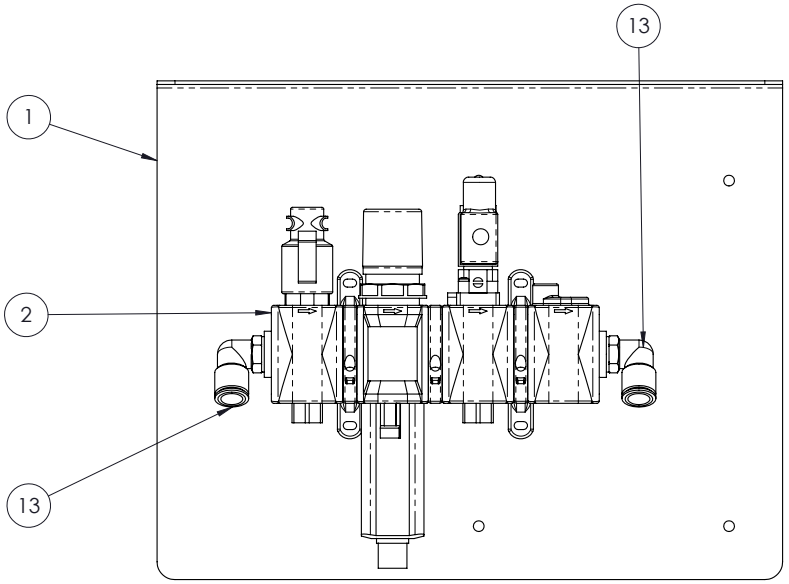

Pos	Q.tà	CODICE
21	1	40300001384
20	1	40220010602
19	4	82405015910
18	4	82425018226
17	1	40100010568
16	1	40300003756
15	1	40300008379
14	1	40300006897
13	2	40300008383
12	1	40300008373

Pos	Q.tà	CODICE
11	1	40300008377
10	4	40300010567
9	4	40300008389
8	2	40100010933
7	2	40300008397
6	1	40300010189
5	1	40110012649
4	1	40230018512
3	1	10030018519
2	1	10030015012
1	1	10000004888

10030018520

IMPIANTO PNEUMATICO

PNEUMATISCHE INSTALLATIE

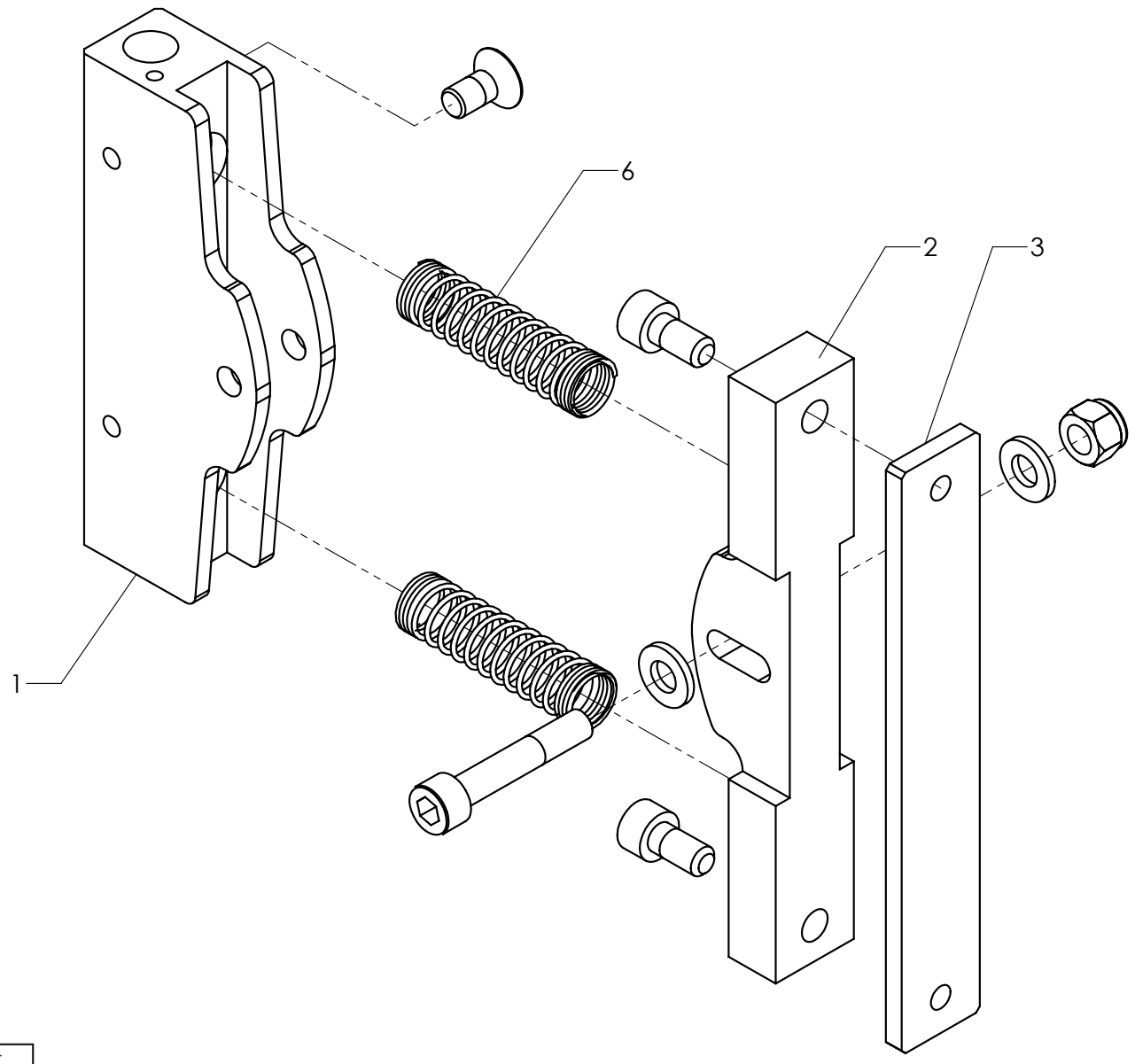

Pos.	Q.ty	Code
6	2	10000010479
3	1	10000010481
2	1	10000010478
1	1	10000010477

10010010476

SALDATORE

LASAPPARAAT

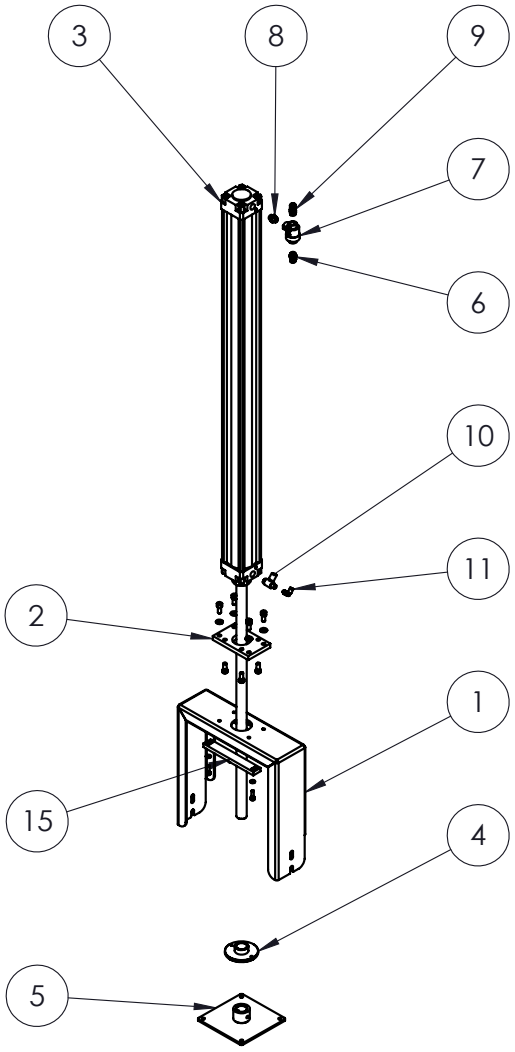

Pos	Qtà	CODICE
15	2	10000017889
11	1	40300010600
10	1	40210001382
9	1	40300001535
8	1	40300010303
7	1	40210001536
6	1	40300010545
5	1	10000005743
4	1	10000008771
3	1	40600017169
2	1	40615009827
1	1	10000017171

10010017170

GRUPPO PRESSORE-GUIDA PRESSORE

DRUKPLAATGROEP-GELEIDER AANDRUKKER

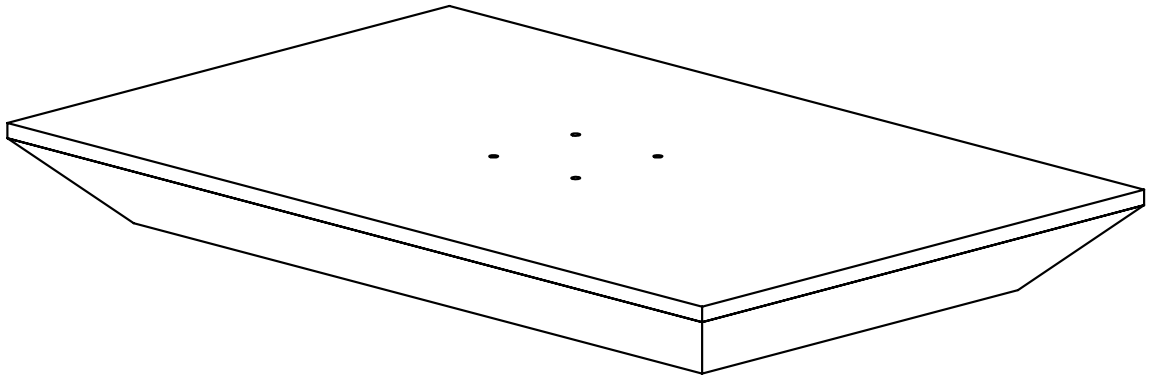

DIMENSIONE/DIMENSION/ DIMENSION/DIMENSIÓN [mm]	COD.
1100X700X120	10010004165
1100X700X70	10010012818
1100X900X120	10010004265
1100X1100X120	10010004271
1300X1300X120	10010004274
700X500X120	10010004268
700X500X70	10010006794
700X900X120	10010005107
1300X1000X120	10010005325
700X900X60	10010005503
1400X900X120	10010007944

10010004165

PIATTO PRESSORE

DRUKPLAAT

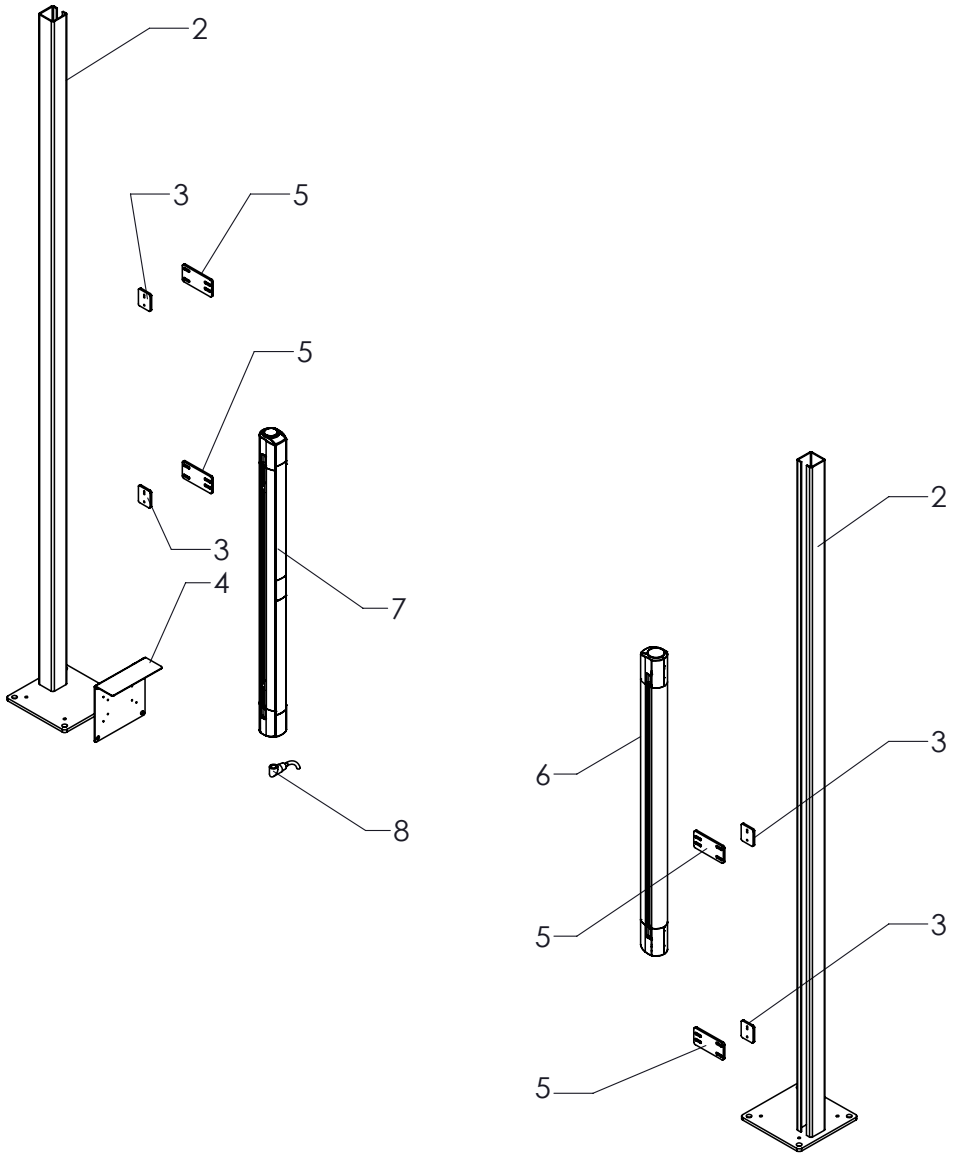

Pos.	Q.ty	Cod.
6	1	82435019313
5	1	82430019301
4	4	10000008434
3	1	10000005162
2	5	10000004874
1	2	10000004854

10020019300

BARRIERA

BARRIÈRES