DuraBlue Adhesive Melters

Models D4L, D10L, and D16L

Customer Product Manual
Part 1032059B
Issued 07/03

NORDSON CORPORATION • DULUTH, GEORGIA • USA
www.nordson.com

Section 7
Parts

Using the Illustrated Parts List

The parts lists provided in this section are organized into the following columns:

Item—Identifies illustrated parts that are available from Nordson Corporation.

Part—Provides the Nordson Corporation part number for each saleable part shown in the illustration. A series of dashes in the parts column (- - - - - -) means the part cannot be ordered separately.

Description—Provides the part name, as well as its dimensions and other characteristics when appropriate. Bullets in the description, indicate the relationships between assemblies, subassemblies, and parts.

Quantity—The quantity required per unit, assembly, or subassembly. The code AR (As Required) is used if the part number is a bulk item ordered in quantities or if the quantity per assembly depends on the product version or model.

NOTE: Illustrations of the model D10 melter are used throughout this section to represent all DuraBlue melters.

© 2003 Nordson Corporation

Front Panel Service Kits

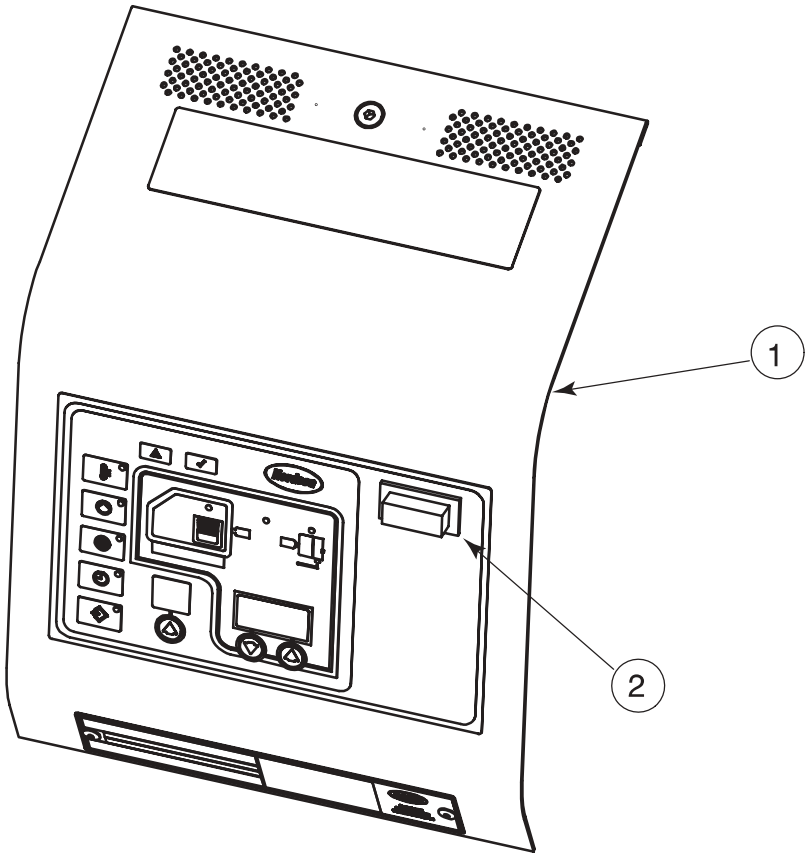

Figure 7-1 Front panel service kit parts

Item	Part	Description	Quantity	Note
—	1031176	Service kit, panel, front, D4L, with tags	—	
1	- - - - - -	• Panel, front	1	
—	1031177	Service kit, panel, front, D10L/D16L, with tags	—	
1	- - - - - -	• Panel, front	1	
2	1017947	Switch, rocker, SPST, 250 V, 16 A	1	

© 2003 Nordson Corporation

Electrical Component Service Kits

Electrical components include circuit boards, fuses, thermostats, heaters, RTDs, and ribbon cables.

Circuit Boards

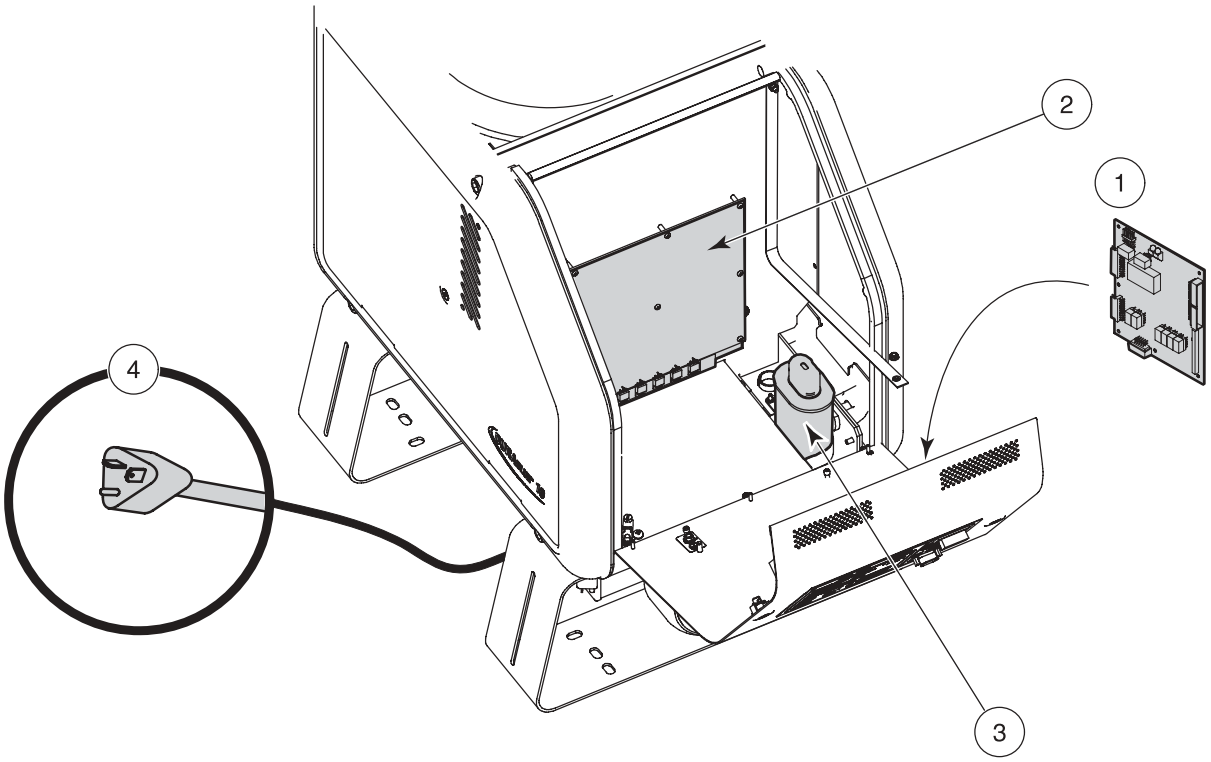

Figure 7-2 Circuit board service kit parts

Item	Part	Description	Quantity	Note
—	1028325	Service kit, board, display/central processing unit (CPU)	—	A
1	- - - - - -	• PCA, display/CPU	1	
NS	- - - - - -	• Stand-off, hex, M3 x 8 mm	6	
NS	- - - - - -	• Washer, lock, M3	6	
—	1031200	Board, main, with heat sink	—	A, B
2		• Board, with heat-sink	1	
3	- - - - - -	Capacitor	1	C
4	1033632	Cord, power, 120 V melter	1	D

NOTE
A: Circuit board service kits include an anti-static wrist strap.
B: For fuses, see Figure 7-3.
C: A capacitor is provided in each motor service kit Refer to *Motor*, in *Drive Assembly Service Kits* later in this section.
D: Available only for 120-volt melters.

© 2003 Nordson Corporation

Fuses

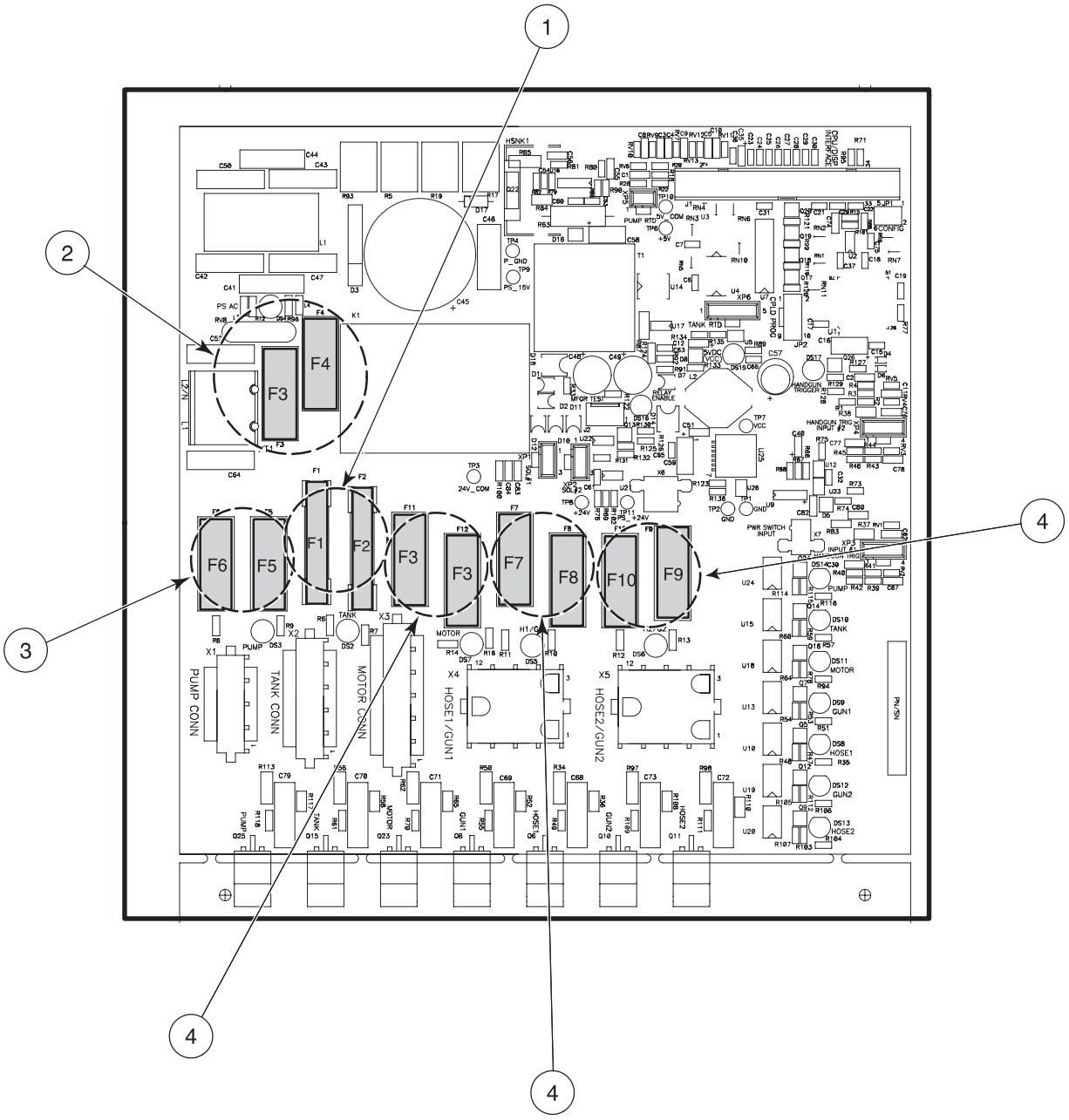

Figure 7-3 Fuse service kit parts

Item	Part	Description	Quantity	Note
—	1031203	Service kit, fuses, main board	—	
1	105419	• Fuse, fast, 10 A, 250 VAC, $^1/_4$ x $1^1/_4$ in., F1–F2	2	
2	939955	• Fuse, slow, 2 A, 250 VAC, 5 x 20 mm, F3–F4	2	
3	- - - - - -	• Fuse, fast, 5 A, 250 VAC, 5 x 20 mm, F5–F6	2	
4	939683	• Fuse, 6.3 A, 250 VAC, 5 x 20 mm, F7–F12	6	

© 2003 Nordson Corporation

Thermostat, Heaters, and RTDs

Item	Part	Description	Quantity	Note
—	1028321	Service kit, thermostat,	—	
NS	- - - - - -	• Thermostat, 00R, 500 degree, open-on-rise	1	
NS	- - - - - -	• Screw, M4 x 6	2	
NS	- - - - - -	• Compound, thermal, 1 gram	1	
—	1031223	Service kit, heater, pump, D4L	—	A
NS	- - - - - -	• Heater assembly, 120 v, 350 W	1	
—	1031224	Service kit, heater, pump, D4L	—	A
NS	- - - - - -	• Heater assembly, 240 V, 350 W	1	
—	1031227	Service kit, heater, pump, D10L/D16L	—	A
NS	- - - - - -	• Heater assembly, 120 V, 300 W	1	
—	1031228	Service kit, heater, pump, D10L/D16L	—	A
NS	- - - - - -	• Heater assembly, 240 V 400 W	1	
—	1031225	Service kit, heater, tank, D4L	—	A
NS	- - - - - -	• Heater assembly, 120 V, 2 x 425 W	1	
—	1031226	Service kit, heater, tank, D4L	—	A
NS	- - - - - -	• Heater assembly, 240 V, 2 x 425 W	1	
—	1031231	Service kit, heater, tank, D10L/D16L	—	A
NS	- - - - - -	• Heater assembly, 120 V, 2 x 450 W	1	
—	1031229	Service kit, heater, tank, D10L	—	A
NS	- - - - - -	• Heater assembly, 240 V, 2 x 650 W	1	
—	1031230	Service kit, heater, tank, D16L	—	A
NS	- - - - - -	• Heater assembly, 240 V, 2 x 900 W	1	
—	1031233	Service kit, RTD, pump	—	A
NS	- - - - - -	• Sensor assembly, RTD	1	
—	1031234	Service kit, RTD, tank	—	A
NS	- - - - - -	• Sensor assembly, RTD and thermostat	1	

NOTE A: All heater and RTD service kits include thermal compound.

NS: Not Shown

Ribbon Cables

Item	Part	Description	Quantity	Note
NS	1026662	Cable assembly, ribbon, 34-position, 3 headers	—	A

NOTE A: Connects the CPU to the main board.

NS: Not Shown

© 2003 Nordson Corporation

Tank Strainer

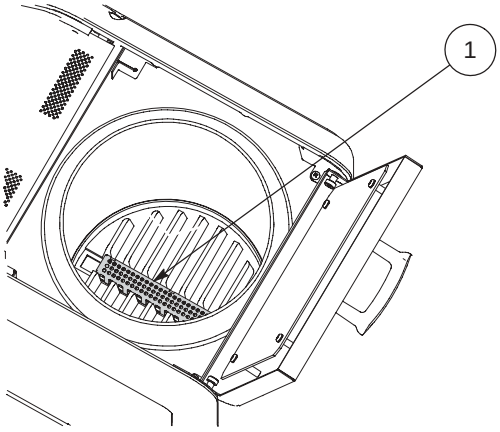

Figure 7-4 Tank strainer

Item	Part	Description	Quantity	Note
1	1028330	Strainer, tank, D4L	1	
1	1028334	Strainer, tank, D10L	1	
1	1028336	Strainer, tank, D16L	1	

© 2003 Nordson Corporation

Drive Assembly Service Kits

Table 7-1 lists the motor, pump, and manifold service kits associated with each melter part number. The seven-digit part number for your melter is provided on the ID plate, which is located on the front of the melter.

Table 7-1 Drive Assembly Components

Melter P/N	Motor P/N	Pump P/N	Manifold P/N	Complete Drive Assembly P/N
1026747	1031211	1031204	1031207	1031216
1026750	1031211	1031204	1031207	1031216
1026748	1031211	1031204	1031208	1031217
1026751	1031211	1031204	1031208	1031217
1026753	1031213	1031205	1031207	1031218
1026755	1031213	1031205	1031207	1031218
1026752	1031211	1031204	1031208	1031217
1026754	1031211	1031204	1031208	1031217
1026760	1031213	1031205	1031207	1031218
1026761	1031213	1031205	1031207	1031218
1031898	1031212	1031205	1031208	1031219

© 2003 Nordson Corporation

Pump

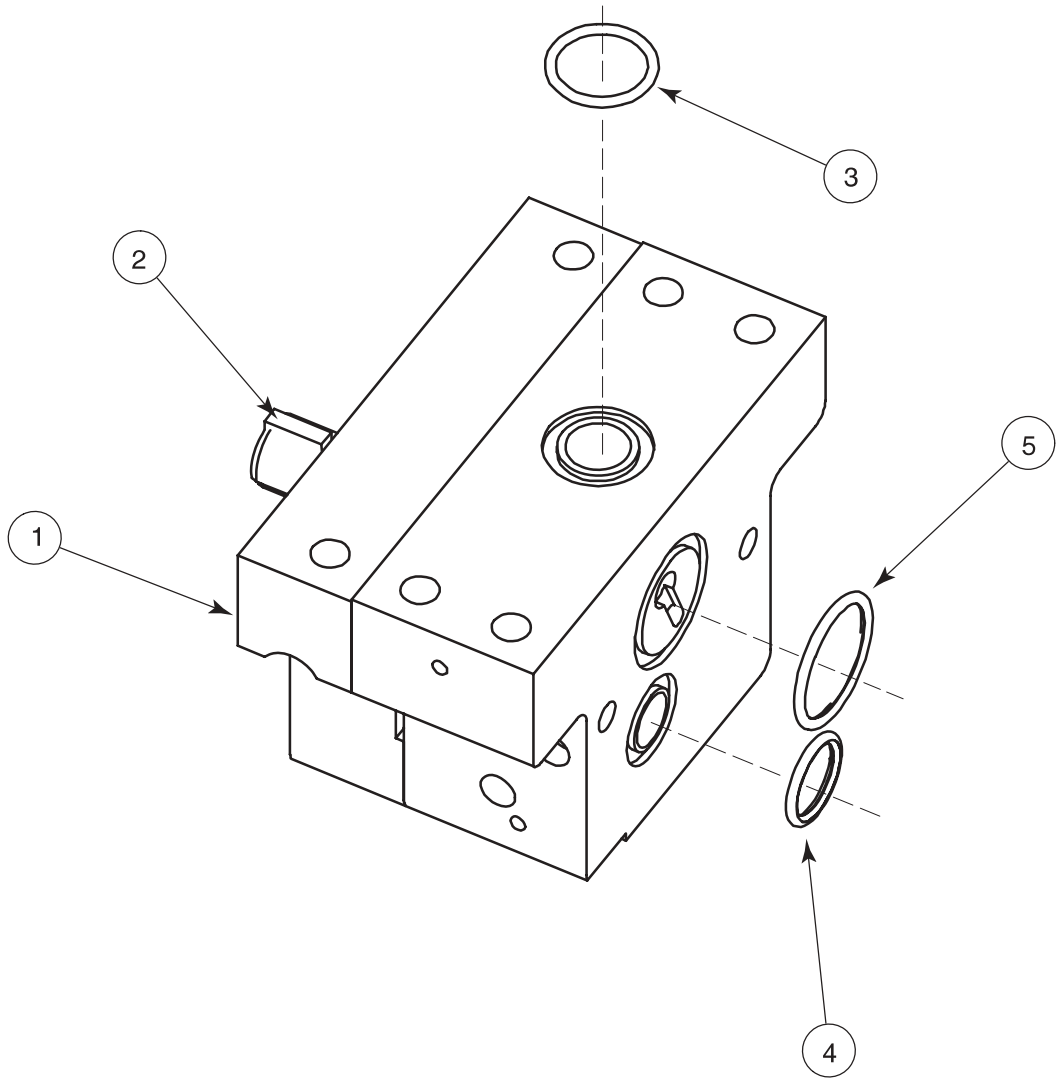

Figure 7-5 Pump service kit parts

Item	Part	Description	Quantity	Note
—	1031204	Service kit, pump, 4.9 cc/rev	—	
—	1031205	Service kit, pump, 7.8 cc/rev	—	
1	- - - - - -	• Pump	1	
2	1033445	• Key, machine drive, $^{3}/_{16}$ x .70 in. (7.8 cc pump)	1	
2	1033444	• Key, machine drive, $^{1}/_{8}$ x $^{3}/_{4}$ in. (4.9 cc pump)	1	
3	- - - - - -	• O-ring, -118, Viton, 0.862 x 0.103 in.	1	
4	- - - - - -	• O-ring, Viton, 0.750 x 0.938 x 0.094 in.	1	
5	- - - - - -	• O-ring, Viton, 1.188 x 1.388 x 0.094 in.	1	
NS	- - - - - -	• Screw, hex, cap, M8 x 90	2	A
NS	- - - - - -	• Washer, flat, narrow, M8	2	A
NS	- - - - - -	• Grease, high-temperature, 0.50 oz	1	

© 2003 Nordson Corporation

Item	Part	Description	Quantity	Note
—	1031232	Service kit, pump O-rings	—	
3	- - - - - -	• O-ring, -118, Viton, 0.862 x 0.103 in.	1	
4	- - - - - -	• O-ring, Viton, 0.750 x 0.938 x 0.094 in.	1	
5	- - - - - -	• O-ring, Viton, 1.188 x 1.388 x 0.094 in.	1	
NS	- - - - - -	• Grease, high-temperature, 0.50 oz	1	
—	1037756	Service kit, seal, pump, 4.9 cc/rev	—	
NS	- - - - - -	• Shaft, pump, 4.9 cc	1	
NS	- - - - - -	• Retaining ring, external, 75	2	
NS	- - - - - -	• Pin, dowel, 0.185 x 1 x 0.250	1	
NS	- - - - - -	• Seal, spring, $^{1}/_{8}$ x 1 x 0.250	3	
NS	- - - - - -	• Washer, 0.989 x 0.789 x 0.040	1	
NS	- - - - - -	• Retaining ring, internal, 100, inverted	1	
NS	- - - - - -	• O-ring, Viton, 2 $^{11}/_{16}$ x 2 $^{7}/_{8}$ x $^{3}/_{32}$	1	
NS	- - - - - -	• O-ring, Viton, 0.750 x 0.938 x 0.094	1	
NS	- - - - - -	• O-ring, –188, Viton, 0.862 x 0.103	1	
NS	- - - - - -	• O-ring, Viton, 1.188 x 1.388 x 0.094	1	
NS	- - - - - -	• Grease, high-temperature, 0.50 oz.	1	
NS	- - - - - -	• Key, machine drive, 0.125 x 0.75	1	
NS	- - - - - -	• Tool, seal insertion	1	
—	1037757	Service kit, seal, pump, 7.8 cc/rev	—	
NS	- - - - - -	• Shaft, pump, 7.8 cc	1	
NS	- - - - - -	• Retaining ring, external, 75	2	
NS	- - - - - -	• Pin, dowel, 0.185/0.184 dia. x 0.438 long	1	
NS	- - - - - -	• Seal, spring, $^{1}/_{8}$ x 1 x 0.250	3	
NS	- - - - - -	• Washer, 0.989 x 0.789 x 0.040	1	
NS	- - - - - -	• Retaining ring, internal, 100, inverted	1	
NS	- - - - - -	• O-ring, Viton, 2 $^{11}/_{16}$ x 2 $^{7}/_{8}$ x $^{3}/_{32}$	1	
NS	- - - - - -	• O-ring, Viton, 0.750 x 0.938 x 0.094	1	
NS	- - - - - -	• O-ring, –188, Viton, 0.862 x 0.103	1	
NS	- - - - - -	• O-ring, Viton, 1.188 x 1.388 x 0.094	1	
NS	- - - - - -	• Grease, high-temperature, 0.50 oz.	1	
NS	- - - - - -	• Key, machine drive, 0.1875 x 0.70	1	
NS	- - - - - -	• Tool, seal insertion	1	

NOTE A: See *Drive Assembly (Complete)*

NS: Not Shown

© 2003 Nordson Corporation

Manifold

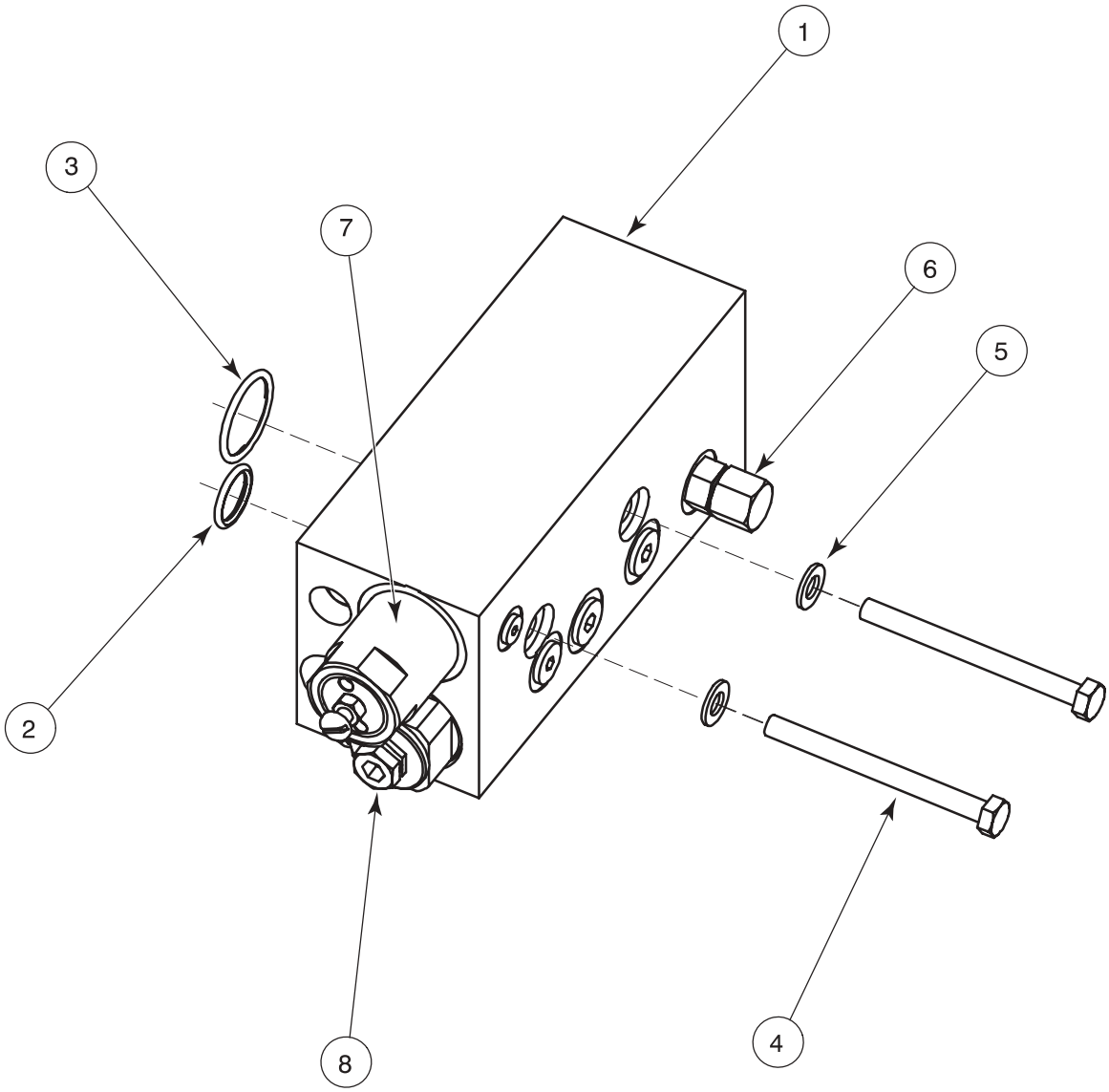

Figure 7-6 Manifold service kit parts

© 2003 Nordson Corporation

Item	Part	Description	Quantity	Note
—	1031207	Service kit, manifold, 2-port, 600 psi, unfiltered	—	
—	1031208	Service kit, manifold, 4-port, 1100 psi, filtered	—	
1	- - - - - -	• Manifold assembly	1	
2	- - - - - -	• O-ring, Viton, 0.750 x 0.938 x 0.094 in.	1	
3	- - - - - -	• O-ring, Viton, 1.188 x 1.388 x 0.094 in.	1	
4	- - - - - -	• Screw, hex, cap, M8 x 90, 304 stainless-steel	2	
5	- - - - - -	• Washer, flat, narrow, M8	2	
6	- - - - - -	• Connector, with O-ring, hose, $^{9}/_{16}$-18	1 or 2	A
6	- - - - - -	• Connector, 90 degree, $^{9}/_{16}$-18 x $^{9}/_{16}$-18	1	B
NS	- - - - - -	• Grease, high-temperature, 0.50 oz	1	
—	1031221	Service kit, valve, pressure control, 600 psi	—	
7	- - - - - -	• Valve, PCV, 600 psi	1	
—	1031222	Service kit, valve, pressure control, 1100 psi	—	
7	- - - - - -	• Valve, PCV, 1100 psi	1	
8	1021941	Filter, with O-ring, 50-mesh	1	
	1028305	Filter, with O-ring, 100-mesh	1	
	1034720	Filter, with O-ring, 150-mesh	1	
NS	- - - - - -	• O-ring, Viton, $^{3}/_{4}$ in. tube	1	
NS	- - - - - -	• Lubricant, Parker, high-temperature	1	

NOTE A: The 2-port manifold service kits include one hose connector. The 4-port manifold service kit includes two hose connectors.

B: This hose connector is included only in the 4-port manifold service kit.

NS: Not Shown

© 2003 Nordson Corporation

Motor

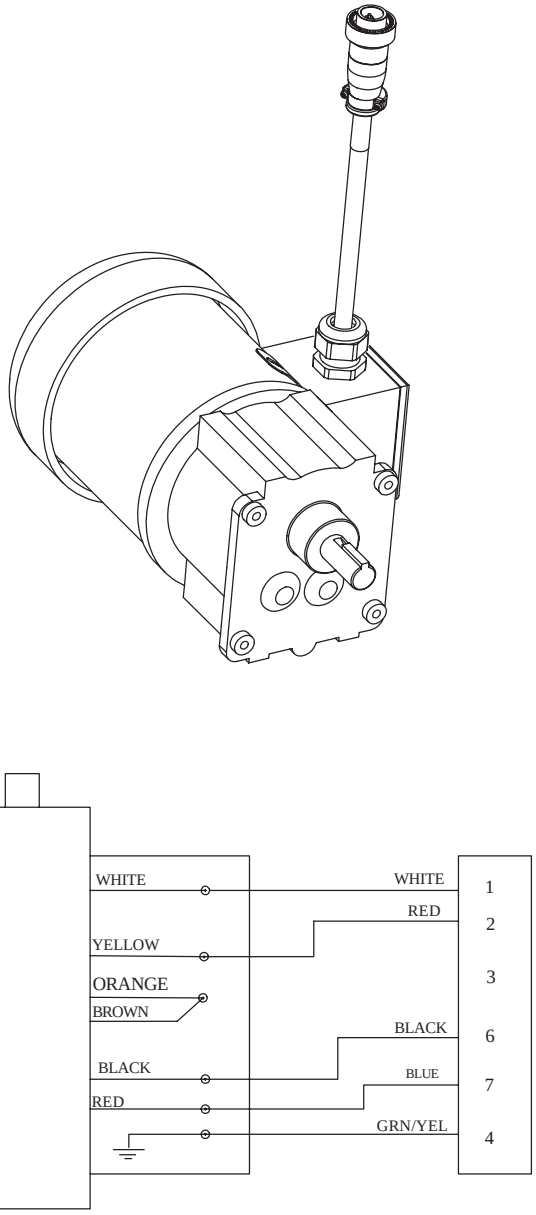

Figure 7-7 $^{1}/_{6}$ and $^{1}/_{4}$ hp motor service kit parts

Item	Part	Description	Quantity	Note
1	1031211	Motor, $^{1}/_{6}$ hp, with pigtail, 86 rpm	1	
NS	208276	• Capacitor, 10 µ F, 370 VAC	1	A
1	1031213	Motor, $^{1}/_{4}$ hp, with pigtail, 131 rpm	1	
NS	- - - - - -	• Capacitor, 25 µ F, 440 VAC	1	A
1	1031212	Motor, $^{1}/_{4}$ hp, with pigtail, 89 rpm	1	
NS	- - - - - -	• Capacitor, 25 µ F, 440 VAC	1	A
NOTE A: For the location of the capacitor, see Figure 7-2. NS: Not Shown				

© 2003 Nordson Corporation

Drive Assembly (Complete)

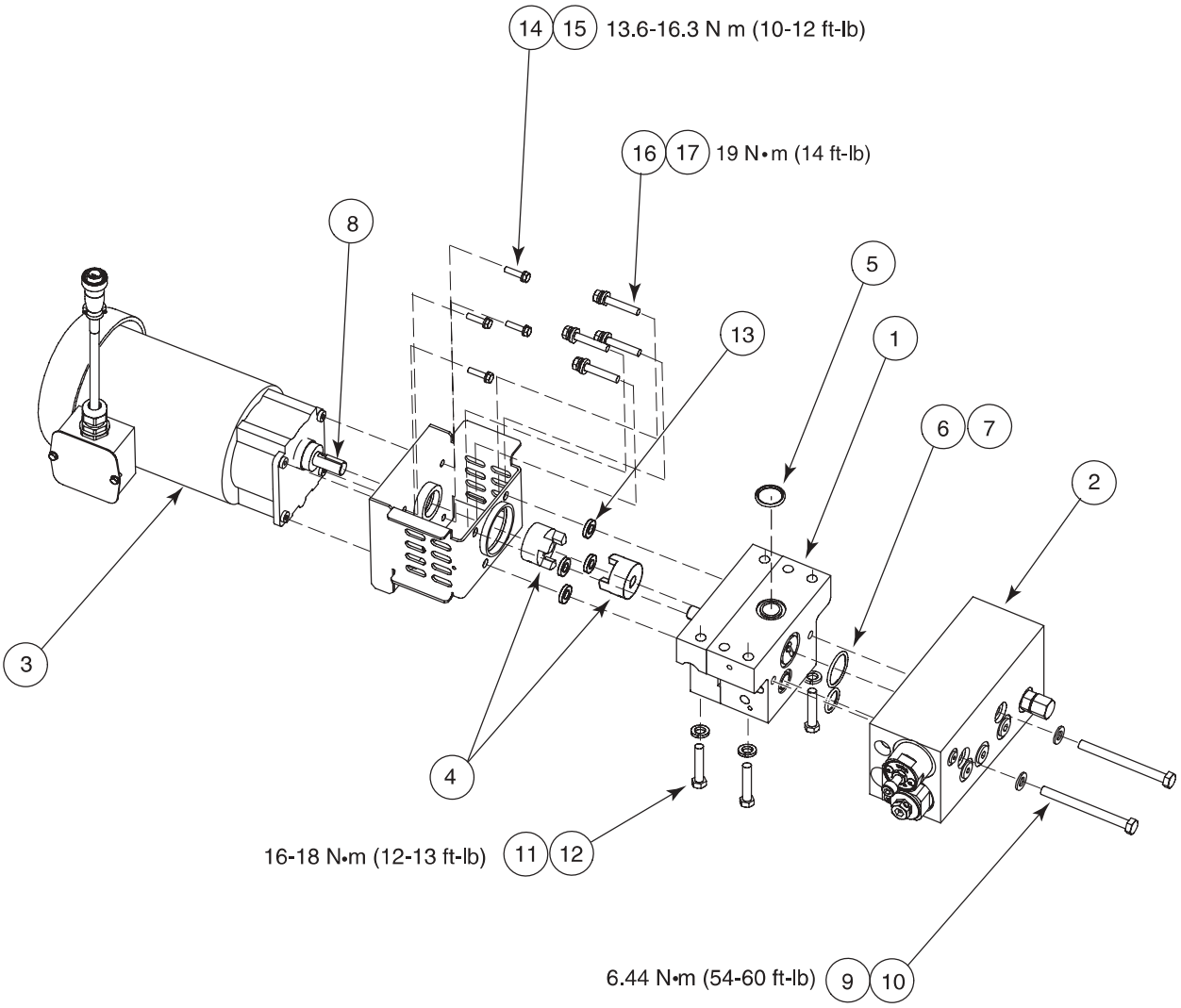

Figure 7-8 $^1/_4$ and $^1/_6$ hp drive assembly

© 2003 Nordson Corporation

Item	Part	Description	Quantity	Note
—	1031216	Service kit, drive assembly, $^1/_6$ hp, 600 psi, non-filtered	—	
—	1031217	Service kit, drive assembly, $^1/_6$ hp, 1100 psi, filtered	—	
—	1031218	Service kit, drive assembly, $^1/_4$ hp, 600 psi, non-filtered	—	
—	1031219	Service kit, drive assembly, $^1/_4$ hp, 1100 psi, filtered	—	
1		• Pump	1	A
2		• Manifold	1	B
3		• Motor	1	C
4	1043466	• Coupling, drive, $^1/_2$ x $^5/_8$ ($^1/_6$ hp drive)	1	
	1043467	• Coupling, drive, $^5/_8$ x $^5/_8$ ($^1/_4$ hp drive)	1	
5		• O-ring, -118, Viton, 0.862 x 0.103 in.	1	
6		• O-ring, Viton, 1.188 x 1.388 x 0.094 in.	1	A
7		• O-ring, Viton, 0.750 x 0.938 x 0.094 in.	1	A
8		• Key, machine, $^3/_{16}$ x 1 inch long	1	
9		• Screw, hex, cap, M8 x 90, 304 stainless-steel	2	A
10		• Washer, flat, narrow, M8	2	A
11		• Screw, hex, cap, machine, M8 x 60	4	D
12		• Washer, lock, M8	4	D
13		• Spacer	4	
14		• Screw, hex, cap, M5 x 14	4	
15		• Washer, lock, M5	4	
16		• Screw, hex, cap, M8 x 50	4	
17		• Washer, lock, M8	4	
NS	- - - - - -	• Capacitor	1	C
NS	- - - - - -	• Grease, high-temperature, 0.50 oz	1	

NOTE A: Provided in pump service kit. Refer to *Pump* earlier in this section for kit part numbers.
B: Refer to *Manifold* earlier in this section.
C: Refer to *Motor* earlier in this section.
D: Shown for reference only. Not included in service kit.
NS: Not Shown

© 2003 Nordson Corporation

Optional Equipment

Software

Part	Description	Quantity
1018817	Kit, service, software ProBlue melter	—
- - - - - -	• Firmware, ProBlue melter controller, main, PLCC	1
- - - - - -	• Tool, chip removal, Connaccy	1
- - - - - -	• Strap, ground, wrist, anti-static	1

Air Control Kit

Part	Description	Quantity
1030533	Kit, air control	—

Pressure Control Valve Knob

Part	Description	Quantity
1034248	Kit, knob, adjustment, pressure control valve	—
- - - - - -	• Knob, assembly, M8 x 110, knurled	1

Footswitch Kit

Part	Description	Quantity
1030542	Kit, footswitch	—
- - - - - -	• Footswitch, momentary	1

Drain Valve Kit

Part	Description	Quantity
1037495	Kit, drain valve	—

© 2003 Nordson Corporation

Hose Support Kit

Part	Description	Quantity
1030539	Kit, support, hose, double	—
- - - - - -	• Bracket, support, hose, single	2
- - - - - -	• Nut, hex, M5, Nylok	2
- - - - - -	• Washer, flat, oversized, 5	2
- - - - - -	• Cuff, cap, hose, corrugated	2
- - - - - -	• Tube, Nylon, corrugated, split	2
- - - - - -	• Screw, pan-head, M4 x10	4
- - - - - -	• Cuff, hose, corrugated	2
- - - - - -	• Bracket, slide, support, 1-hose	2
- - - - - -	• Plate, hose support	1
- - - - - -	• Washer, flat, M6	2

Pressure Gage Kit

Part	Description	Quantity
1030537	Kit, gage, 1500 psi	—
- - - - - -	• Gage, 1500 psi, with chemical seal	1
- - - - - -	• Tape, roll	1
- - - - - -	• Swivel, 37, $^{9}/_{16}$ –18 x $^{1}/_{4}$	1
- - - - - -	• Connector with O-ring, hose, $^{9}/_{16}$ –18	1

Handgun Support Kit

Part	Description	Quantity
1030530	Kit, handgun support	—
- - - - - -	• Bracket, handgun support	1
- - - - - -	• Screw, hex, M5 x 30	2
- - - - - -	• Washer, flat, oversized, M5	2
- - - - - -	• Nut, hex, M5, Nylok	2

Automatic Pressure Control

Part	Description	Quantity
1028627	Assembly, tachometer, generator and cable	1
1032537	Controller, FC1, DuraBlue	1
1024689	Valve, run-up PCV, 1100 psi	1
1030537	Kit, gage, 1500 psi	1

© 2003 Nordson Corporation