Operating and Service Manual

RO-MP-2 500x400

2000 v.1

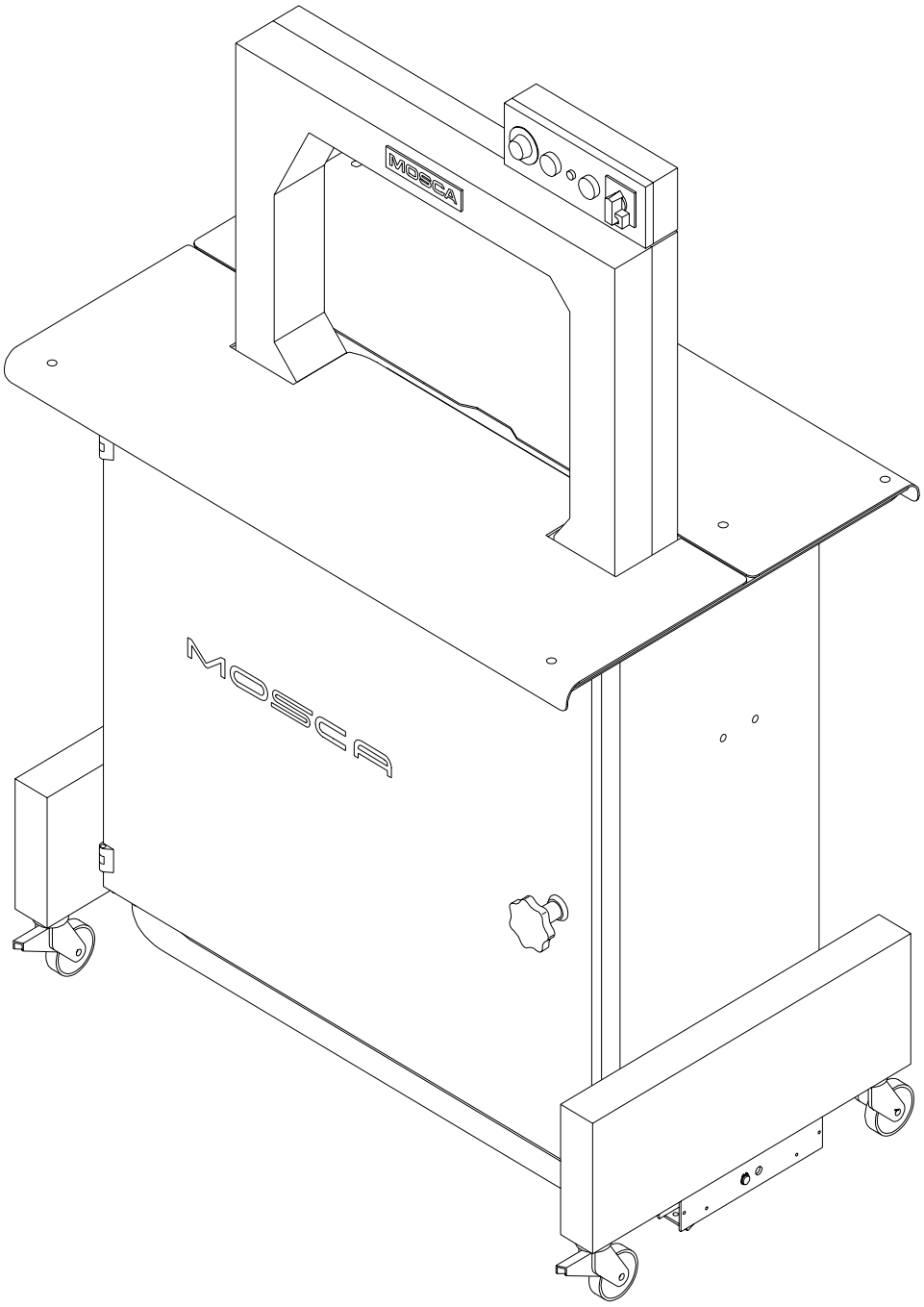

MOSCA

PACKAGING TECHNOLOGY

TÜV CERT
EN ISO 9001
70 100 M 745

EAM-MOSCA Corp.

MAIN SHAFT ASSEMBLY

1620-0110-00 4/14/1997

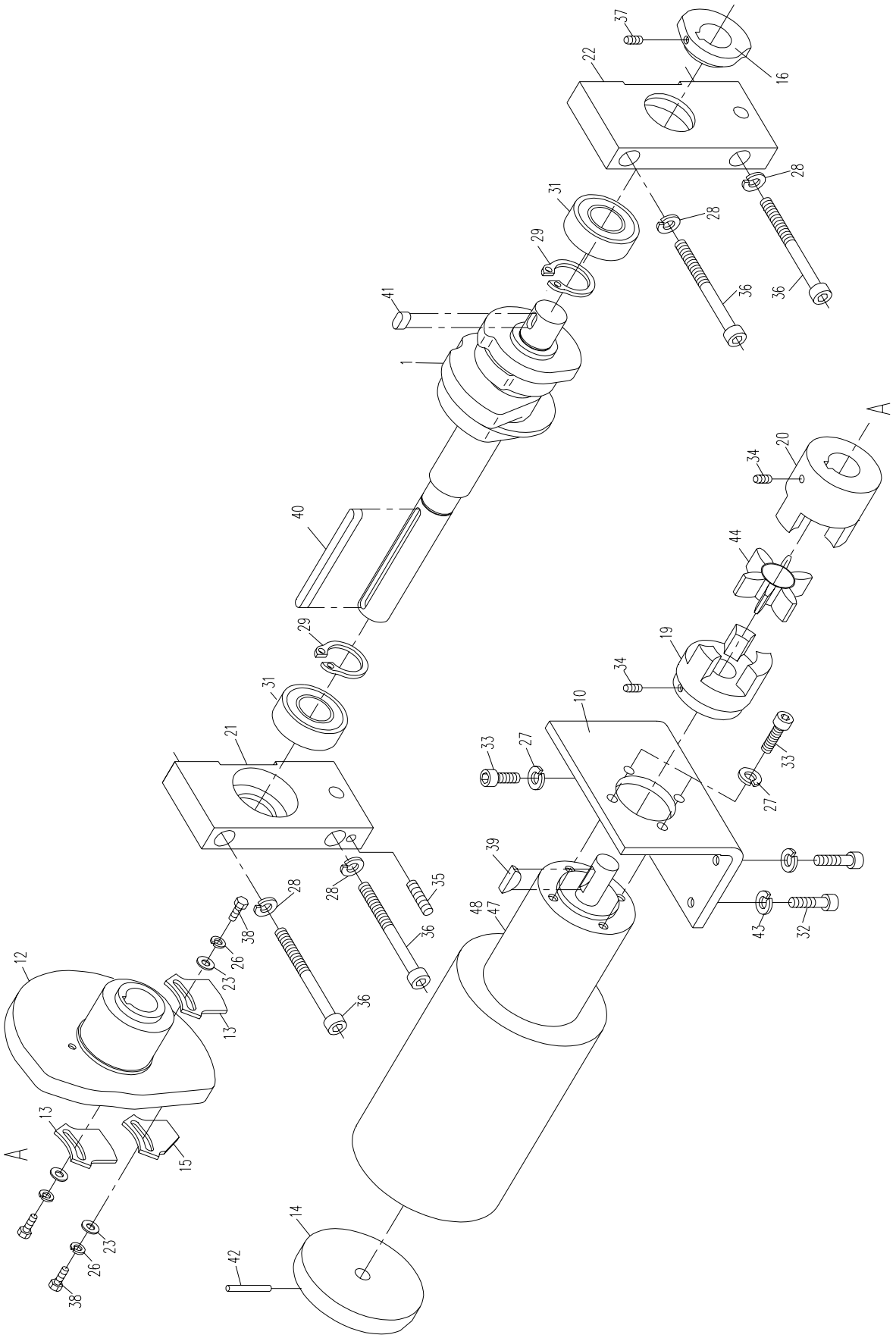

MAIN SHAFT ASSEMBLY				
1620-0110-00				
Item	**Part Number:**	**Description:**	**Qty:**	**Notes:**
1	1620-0111-00	Cam Set Assembly Complete	1	
10	1620-0110-10	Motor Bracket	1	
12	1620-0110-12	Strap Track Cam	1	
13	1620-0110-13	Sensor Flag	2	
14	1620-0110-14	Hand Adjustment	1	
15	1620-0110-15	Sensor Flag	1	
16	1620-0110-16	Cam	1	
19	2670-0110-19	Coupling	1	
20	2670-0110-20	Coupling	1	
21	0401-0110-11	Left Bearing Block	1	
22	0401-0110-12	Right Bearing Block	1	
23	NT 72	Washer	3	
26	NT 176	Lock Washer	3	
27	NT 74	Lock Washer	5	
28	NT 1672	Lock Washer	4	
29	NT 7	Snap Ring	2	
31	NT 9 **	Bearing	2	
32	NT 18	Socket Cap Screw	2	
33	NT 76	Socket Cap Screw	5	
34	NT 891	Set Screw	2	
35	NT 1008	Set Screw	1	
36	NT 259	Socket Cap Screw	4	
37	NT 872	Set Screw	1	
38	NT 475	Hex Screw	3	
39	NT 2445	Woodruff Key	1	
40	NT 36	Key	1	
41	NT 80	Key	1	
42	NT 999	Roll Pin	1	
43	NT 2222	Lock Washer	2	
44	NT 2129B02	Coupling Insert	1	
47	ME 1882	Motor (over 600mm)	1	
48	ME 2120	Motor (Up to 600mm)	1	

CAM SHAFT ASSEMBLY

1620-0111-00 12/9/96

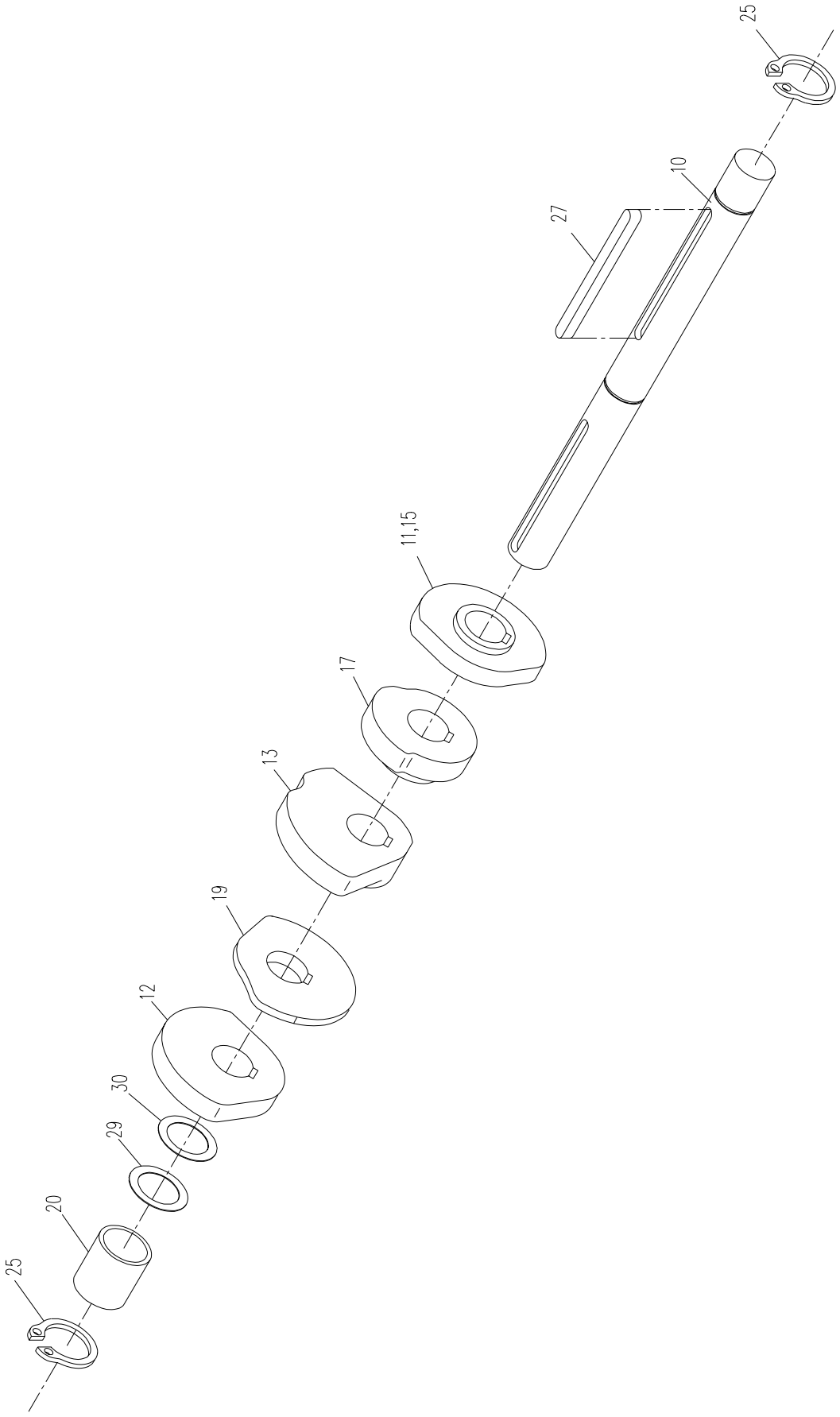

CAM SHAFT ASSEMBLY				
1620-0111-00				
Item	**Part Number:**	**Description:**	**Qty:**	**Notes:**
10	1620-0111-10	Shaft	1	
11	1620-0111-11	Slide Plate Cam (Cam 27)	1	5-6mm Strap
12	1620-0111-12	Left Gripper Cam (Cam 28)	1	
13	1620-0111-13	Knife Bar Cam (Cam 29)	1	
17	0120-0111-03	Right Gripper Cam (Cam 21)	1	
19	2902-010101-06	Heater Cam (Cam 38)	1	
20	2101-2110-09	Spacer Bushing	1	
25	NT 7	Retaining	2	
27	NT 36	Key	1	
29	NT 1582	Spacer	1	
30	NT 1067	Spacer	1	

UPPER SLIDE PLATE ASSEMBLY

1620-0120-00 4/7/97

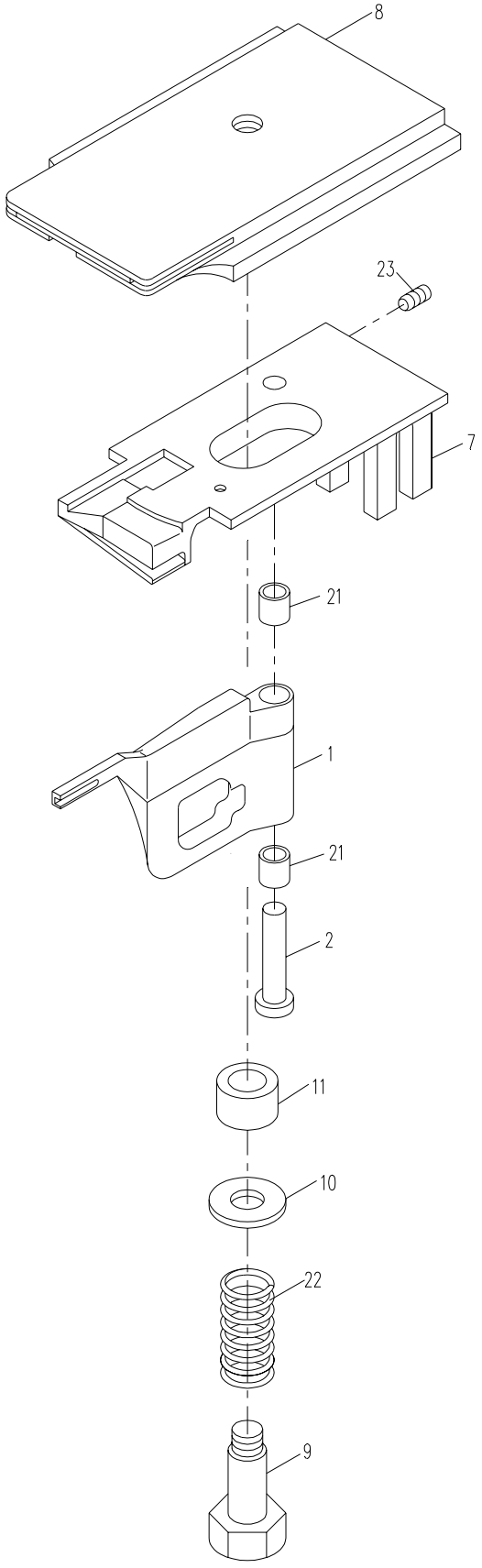

UPPER SLIDE PLATE ASSEMBLY				
1620-0120-00				
Item	**Part Number:**	**Description:**	**Qty:**	**Notes:**
1	2125-0120-01	Strap Sensor Flag	1	
2	2125-0120-02	Pin	1	
7	0101-0121-01	Lower Slide Plate	1	
8	0101-0120-01 **	Upper Slide Plate - Long	1	
9	0401-0120-04	Shoulder Bolt	1	
10	0401-0120-05	Washer	1	
11	0101-0120-05 **	Bumper	1	
21	NT 522	Du-Bushing	2	
22	NT 663 **	Compression Spring	1	
23	NT 891	Set Screw	1	

SEALER: KNIFE-GRIPPER ASSEMBLY

0101-013000-16 8/15/1997

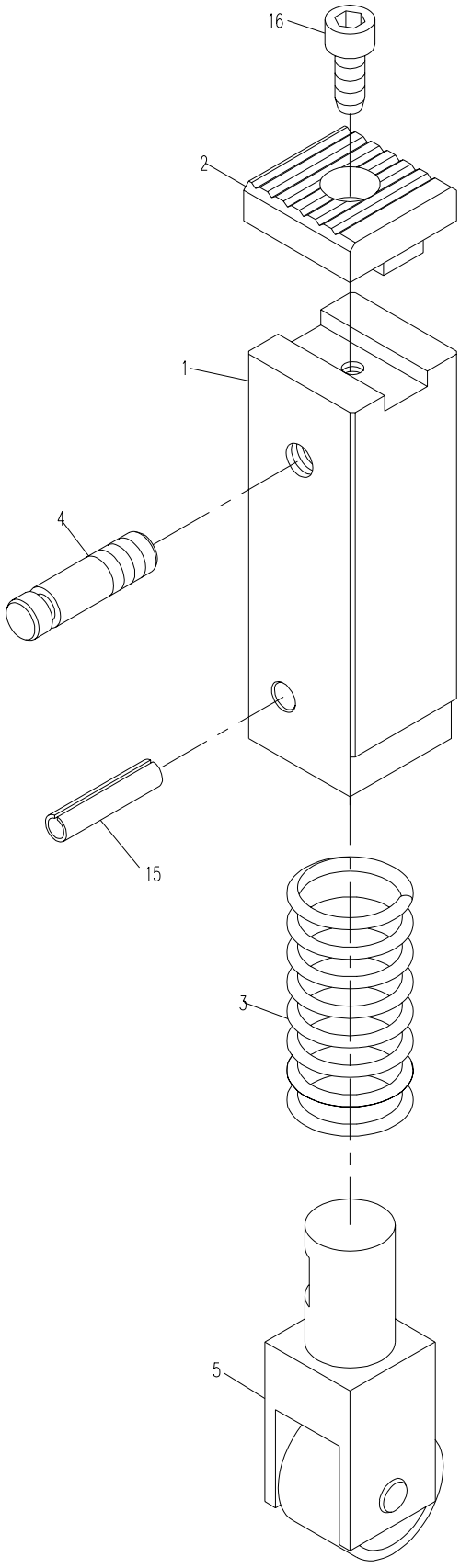

30.10.98 E.R.

Reinhardt Oktober 1998
Massstab 1 : 1

SEALER KNIFE-GRIPPER ASSEMBLY				
0101-013000-16				
Item	**Part Number:**	**Description:**	**Qty:**	**Notes:**
1	0101-013000-02	Knife Pressure Bar	1	
2	0101-013000-03 **	Knife	1	
3	0101-013000-08 **	Compression Spring	1	
4	0101-013000-10	Spring Pin	1	
5	0101-013000-20	Cam Roller Complete	1	
15	NT 181	Roll Pin	1	
16	NT 179	Socket Cap Screw	1	

SEALER RIGHT GRIPPER ASSEMBLY

0101-0130-17 8/21/1997

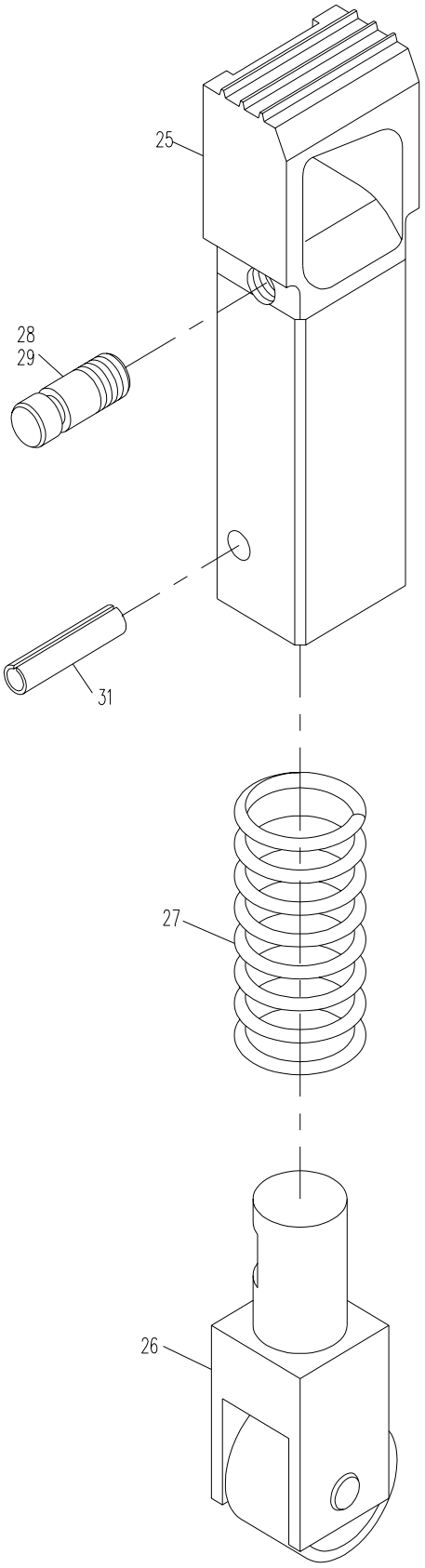

21.08.97 E.Re.

Reinhardt August
Massstab 1 : 1

SEALER RIGHT GRIPPER ASSEMBLY				
0101-013000-17				
Item	**Part Number:**	**Description:**	**Qty:**	**Notes:**
25	0101-013000-04	Right Gripper Bar	1	
26	0101-013000-20	Cam Roller Complete	1	
27	0101-013000-08 **	Compression Spring	1	
28	0101-013000-10	Spring Pin	1	
29	0101-013000-12	Spring Pin	1	
31	NT 181	Roll Pin	1	

SEALER LEFT GRIPPER ASSEMBLY

0401-0130-01 8/21/1997

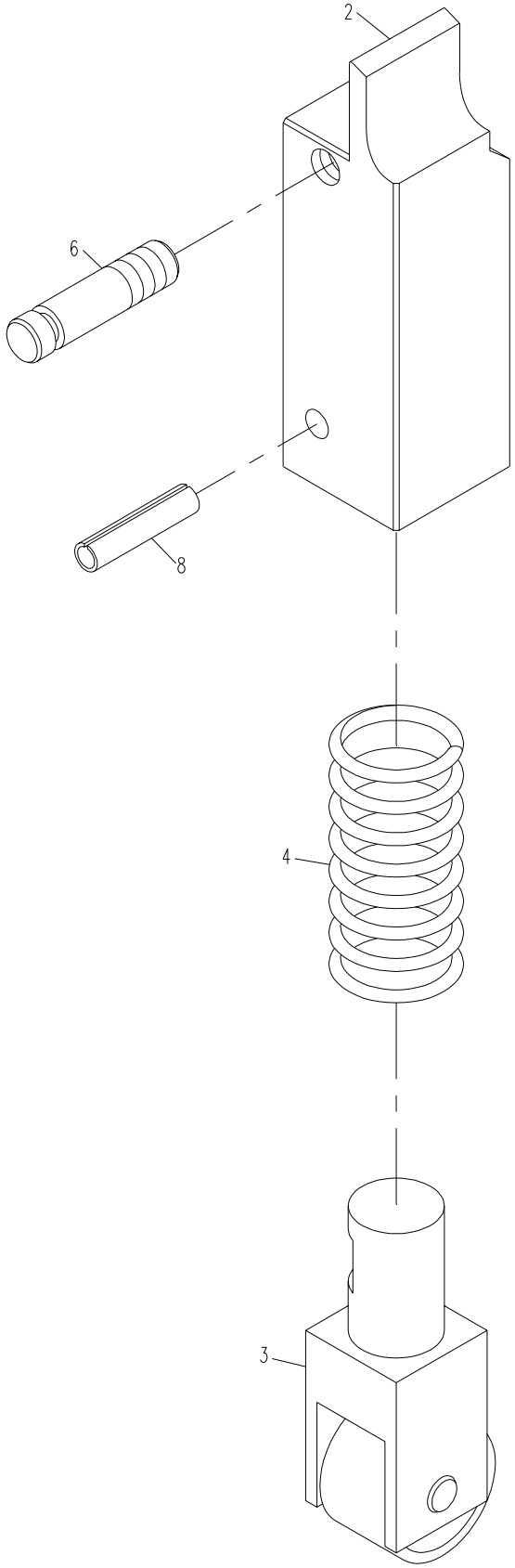

21.08.97 E.R.

Reinhardt August 1997
Massstab 1 : 1

SEALER LEFT GRIPPER ASSEMBLY				
0401-0130-01				
Item	**Part Number:**	**Description:**	**Qty:**	**Notes:**
2	0101-013000-01	Left Gripper Bar	1	
3	0101-013000-10	Cam Roller Complete	1	
4	0101-013000-08 **	Compression Spring	1	
6	0101-013000-10	Spring Pin	1	
8	NT 181	Roll Pin	1	

SEALER KNIFE & GRIPPER BARS ASSEMBLY

1601-013000-16 3/5/1999

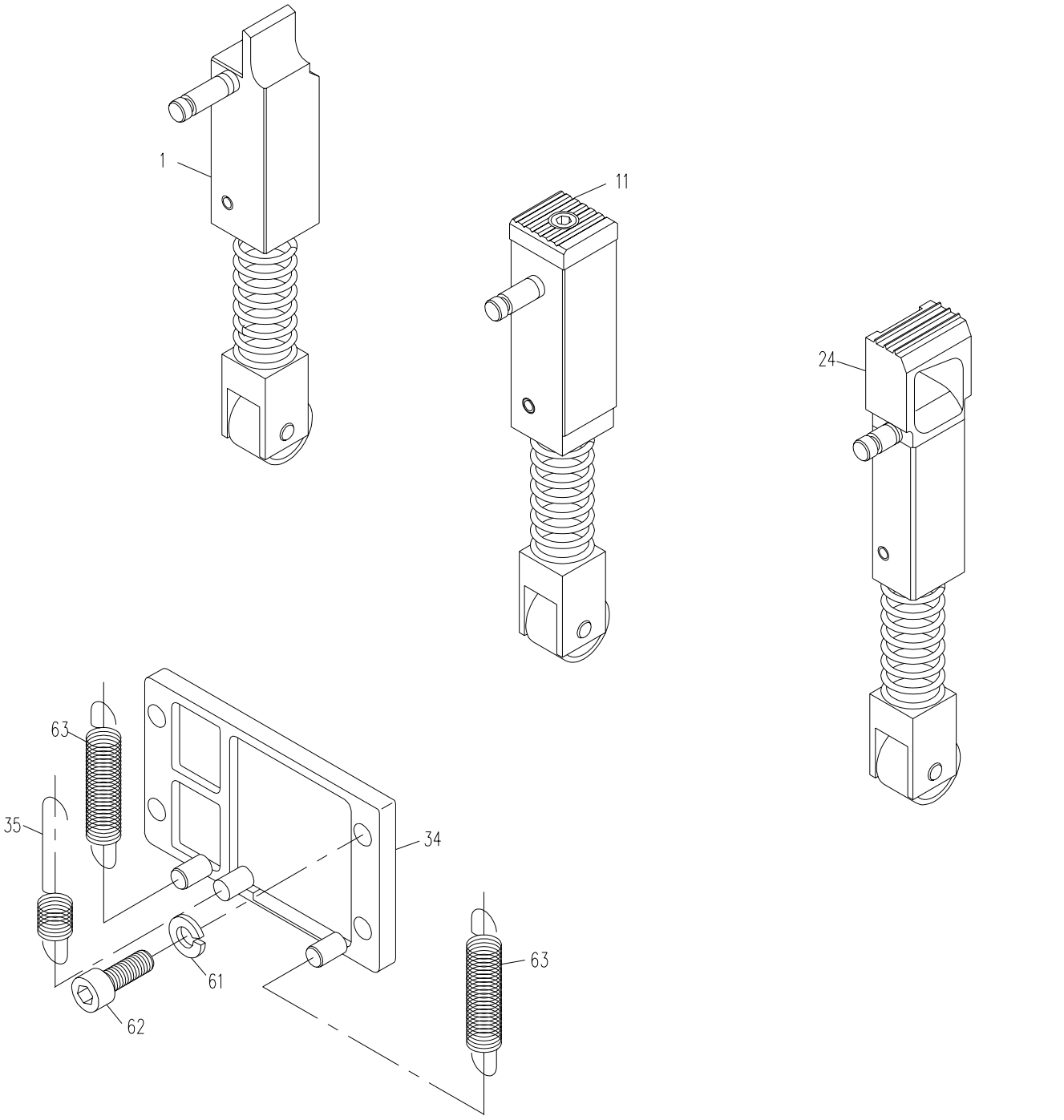

15.08.1997 E.R.

Reinhardt April 1997
Massstab 1 : 2

SEALER KNIFE & GRIPPER BARS ASSEMBLY				
1601-013000-16				
Item	**Part Number:**	**Description:**	**Qty:**	**Notes:**
1	0401-013000-01	Left Gripper Complete	1	
11	0101-013000-16	Knife Pressure Bar Complete	1	
24	0101-013000-17	Right Gripper Complete	1	
34	0101-013000-13	Cover Plate	1	
35	0101-013000-14 **	Tension Spring	1	
61	NT 66	Lock Washer	4	
62	NT 22	Socket Cap Screw	4	
63	NT 567 **	Tension Spring	2	

SEALER HOUSING ASSEMBLY

1620-0140-00 4/14/97

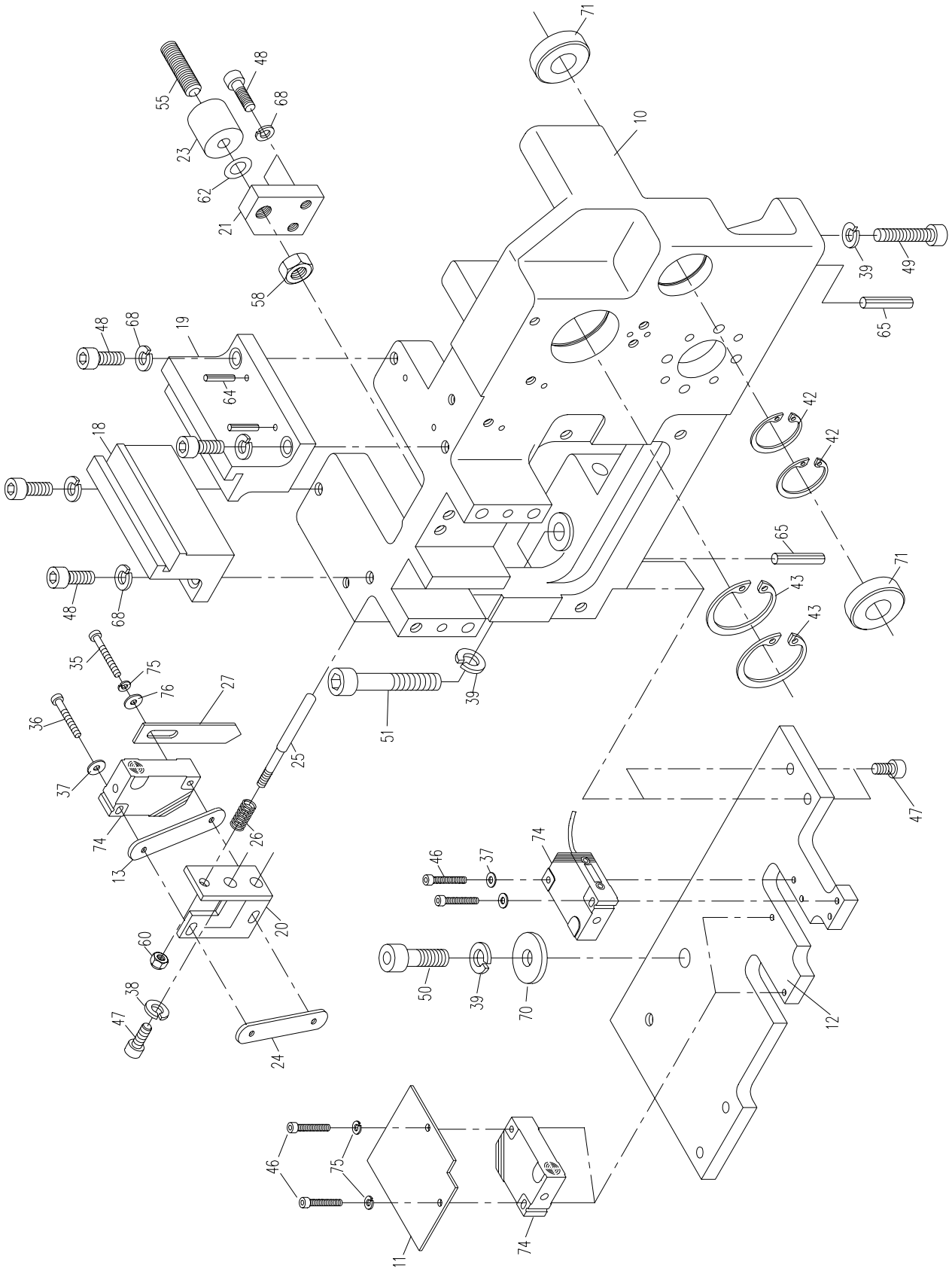

SEALER HOUSING ASSEMBLY				
1620-0140-00				
Item	**Part Number:**	**Description:**	**Qty:**	**Notes:**
10	1620-0140-10	Sealer Housing	1	
11	1620-0140-11	Sensor Plate	1	
12	1620-0140-12	Base Plate	1	
13	1620-0140-13	Spacer Plate	1	
18	2125-0100-10	Left Gib	1	
19	2125-0100-11	Right Gib	1	
20	2125-0100-13	Sensor Support Angle	1	
21	2125-0100-14	Bumper Plate	1	
23	0401-0100-01	Poly. Bumper	1	
24	0401-0100-03	Nut Plate	1	
25	0401-0100-04	Sensor Pin	1	
26	0401-0100-05 **	Compression Spring	1	
27	0401-0800-27	Pointer	1	
35	NT 473	Socket Cap Screw	1	
36	NT 523	Socket Cap Screw	1	
37	NT 32	Washer	2	
38	NT 74	Lock Washer	2	
39	NT 61	Lock Washer	3	
42	NT 995	Internal Snap Ring	2	
43	NT 564	Internal Snap Ring	2	
46	NT 874	Socket Cap Screw	4	
47	NT 18	Socket Cap Screw	4	
48	NT 171	Socket Cap Screw	6	
49	NT 81	Socket Cap Screw	1	
50	NT 141	Socket Cap Screw	1	
51	NT 163	Socket Cap Screw	1	
55	NT 502	Set Screw	1	
58	NT 16	Hex Nut	1	
60	NT 474	Nylock Nut	1	
62	NT 454	Spacer	1	
64	NT 111	Roll Pin	2	
65	NT 233	Roll Pin	2	
68	NT 1672	Lock Washer	6	
70	NT 82	Washer	1	
71	NT 1353 **	Bearing	2	
74	ME 2247 **	Proximity Sensor	3	
75	NT 533	Lock Washer	3	
76	NT 870	Washer	2	

HEATER ASSEMBLY - 24V. DC

0901-0160-00 5/22/96

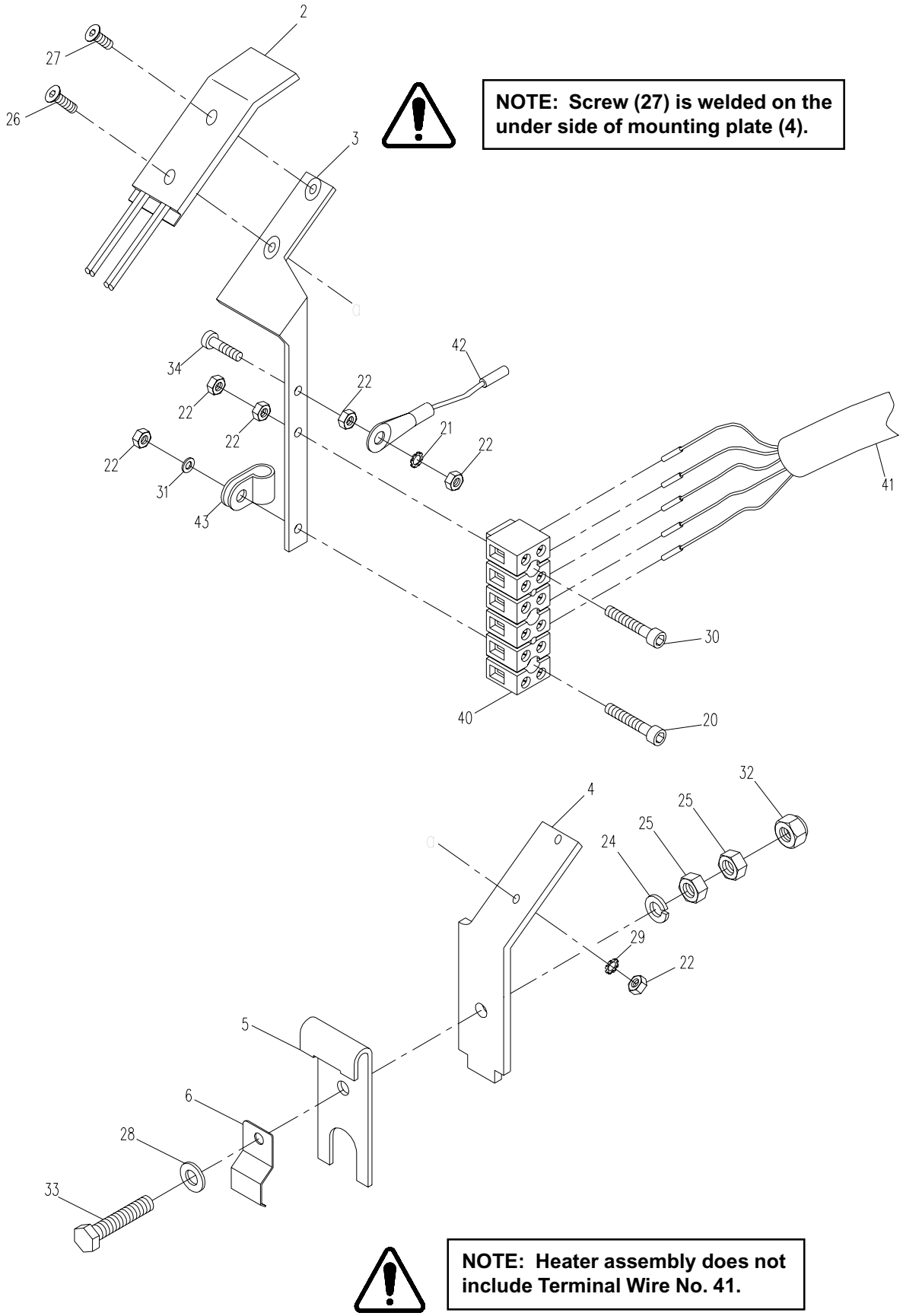

NOTE: Screw (27) is welded on the under side of mounting plate (4).

NOTE: Heater assembly does not include Terminal Wire No. 41.

22.05.1996 H.W.

G.Kaufmann M 1:2
12.07.95

HEATER ASSEMBLY				
0901-0160-00				
Item	**Part Number:**	**Description:**	**Qty:**	**Notes:**
1	0901-0160-00 **	Heater Assembly	1	
2	2601-0150-09	Heating Plate	1	
3	0901-0160-01	Terminal Plate	1	
4	2601-0150-03	Mounting Plate	1	
5	2601-0150-04	Support Plate	1	
6	2601-0150-06	Leaf Spring	1	
20	NT 874	Socket Cap Screw	1	
21	NT 450	Star Washer	1	
22	NT 33	Hex Nut	6	
24	NT 74	Lock Washer	1	
25	NT 48	Hex Nut	2	
26	NT 2132 VA	Flat Head Screw	1	
27	NT 2170 VA	Flat Head Screw	1	
28	NT 12	Washer	1	
29	NT 774	Star Washer	2	
30	NT 449	Socket Cap Screw	1	
31	NT 32	Washer	1	
32	NT 535	Nylock Nut	1	
33	NT 1569	Hex Screw	1	
34	NT 879	Socket Cap Screw	1	
40	ME 193	Terminal Block	1	
41	ME 1884A110	Terminal Wire	1	
42	ME 1978	Ground Connector	1	
43	ME 661	Wire Clamp	1	

STRAP FEED PULL-BACK, TENSION ASSEMBLY

1699-016900-00 9/26/97

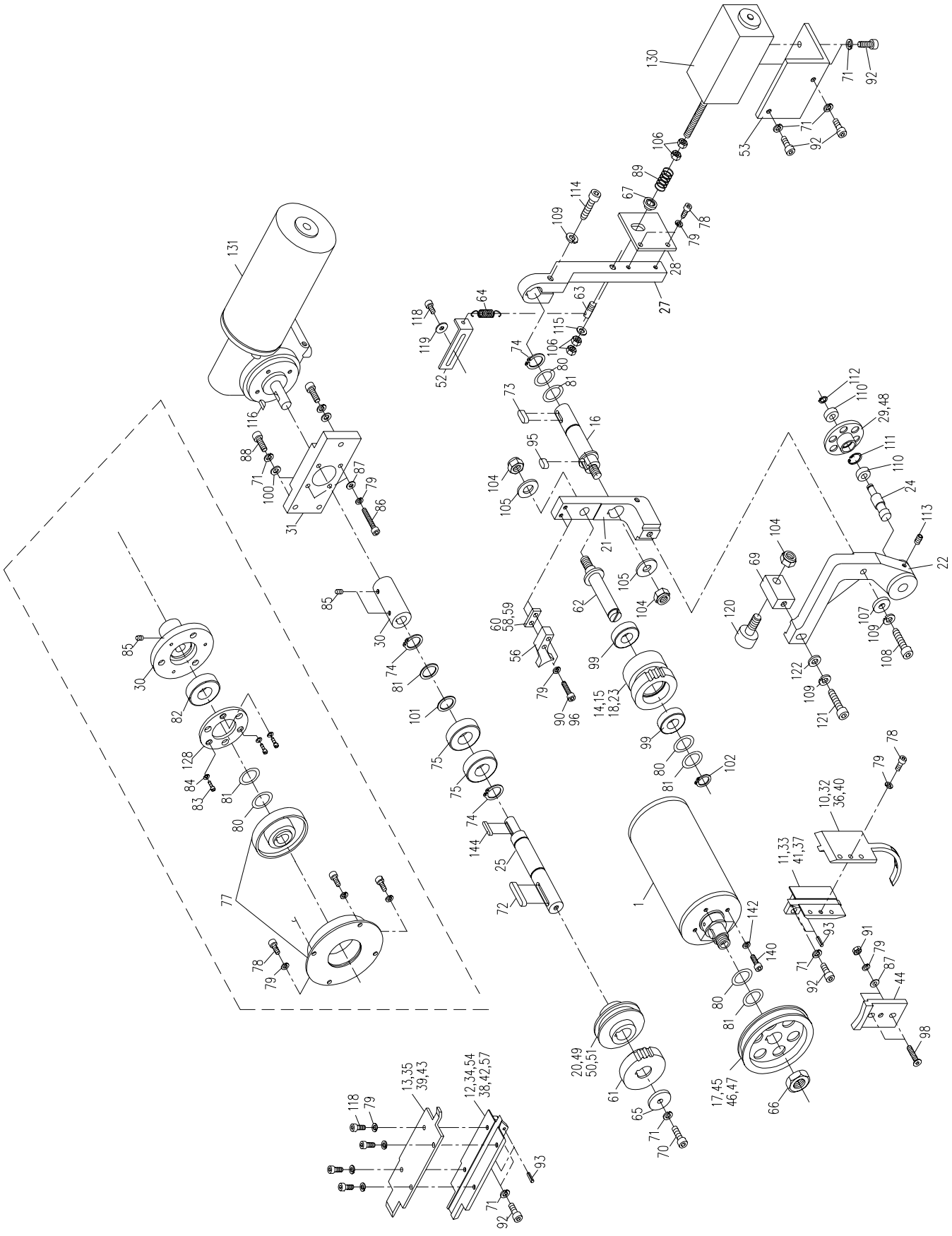

STRAP FEED PULL-BACK, TENSION ASSEMBLY				
1699-016900-00 (5mm Strap)				
Item	**Part Number:**	**Description:**	**Qty:**	**Notes:**
1	1620-016100-00	Brushless Motor with Adapter	1	
10	1620-0160-10	Lower Strap Guide Cover	1	5-6mm Strap
11	1620-0160-11	Lower Strap Guide	1	5-6mm Strap
13	1620-0160-61	Upper Strap Guide Cover	1	5-6mm Strap
14	1620-0160-14	Gear	1	5-6mm Strap
16	1620-0160-16	Pilot Shaft	1	
17	1620-0160-17	Feed Wheel	1	5-6mm Strap
18	1620-0160-18	Gear	1	
20	1699-0165-69 **	Tension Roller	1	5-6mm Strap
21	1620-0160-21	Pivot	1	
22	1620-0160-72	Roller Lever	1	
24	1620-0160-77	Shaft for Roller Lever	1	
25	1699-0161-10	Shaft	1	
27	1620-0160-27	Clamp Bar	1	
28	1620-0160-28	Solenoid Plate	1	
29	1699-0163-29	Pressure Roller	1	5-6mm Strap
30	1699-0161-11	Spacer	1	
31	1620-0160-31	Motor Support	1	
44	1620-0160-44	Strap Guide Block	1	
52	1620-0160-52	Adjustment Angle	1	
53	1620-0160-71	Solenoid Angle Support	1	
56	1620-0160-56	Strap Guide Block	1	
57	1620-0160-57	Upper Strap Guide	1	5mm Strap
60	1620-0160-60	Spacer Plate	1	
61	0101-0140-12	Gear	1	
62	0101-0141-03	Threaded Bolt	1	
63	0401-0710-04	Spring Pin	1	
64	0401-0121-02 **	Tension Spring	1	
65	0101-0140-48	Retaining Washer	1	
66	NT 2321	Hex Nut	1	
67	0401-0142-03	Spring Guide	1	
69	1620-0160-70	Cam Roller Support Block	1	
70	NT 76	Socket Cap Screw	1	
71	NT 74	Lock Washer	11	
72	NT 1899	Key	1	
73	NT 545	Key	1	
74	NT 24	Retaining Ring	3	
75	NT 278 **	Bearing	2	
77	NT 677A0210	Clutch Coil	1	
78	NT 1706	Socket Cap Screw	7	
79	NT 176	Lock Washer	19	
80	NT 489	Spacer	0	
81	NT 327	Spacer	0	
82	NT 1353 **	Bearing	1	
83	NT 433	Socket Cap Screw	3	
84	NT 1107	Rib Washer	3	
85	NT 891	Set Screw	1	
86	NT 276	Socket Cap Screw	4	
87	NT 72	Washer	6	
88	NT 76	Socket Cap Screw	3	
89	NT 685 **	Compression Spring	1	

STRAP FEED PULL-BACK, TENSION ASSEMBLY				
1699-016900-00 (5mm Strap)				
Item	**Part Number:**	**Description:**	**Qty:**	**Notes:**
90	NT 23	Socket Cap Screw	2	
91	NT 13	Hex Nut	2	
92	NT 8	Socket Cap Screw	8	
93	NT 2150	Roll Pin	4	
95	NT 80	Key	1	
96	NT 92	Socket Cap Screw	2	
98	NT 987	Flat Head Screw	2	
99	NT 389 **	Bearing	2	
100	NT 12	Washer	3	
101	NT 717	Spacer	0	
102	NT 101	Retaining Ring	1	
104	NT 458	Nylock Nut	3	
104	NT 15	Washer	2	
106	NT 325	Hex Nut	4	
107	NT 339	Washer	1	
108	NT 6	Socket Cap Screw	1	
109	NT 66	Lock Washer	3	
110	NT 1636 **	Bearing	2	
111	NT 2325	Retaining Ring	1	
112	NT 520	Retaining Ring	1	
113	NT 649	Set Screw	1	
114	NT 6	Socket Cap Screw	1	
115	NT 2328	Washer	1	
116	NT 2261	Woodruff Key	1	
118	NT 95	Socket Cap Screw	5	
119	NT 309	Washer	1	
120	NT 568	Cam Roller	1	
121	NT 171	Socket Cap Screw	1	
122	NT 339	Washer	1	
128	ME 892A02	Clutch Armature	1	
130	ME 2136	Double Solenoid	1	
131	ME 2170	Motor 60 V. DC	1	
140	NT 92	Socket Cap Screw	4	
142	NT 176	Lock Washer	4	
144	NT 1839	Key	1	

HEATER ARM ASSEMBLY - 24 V. DC

2601-0170-00 8/24/96

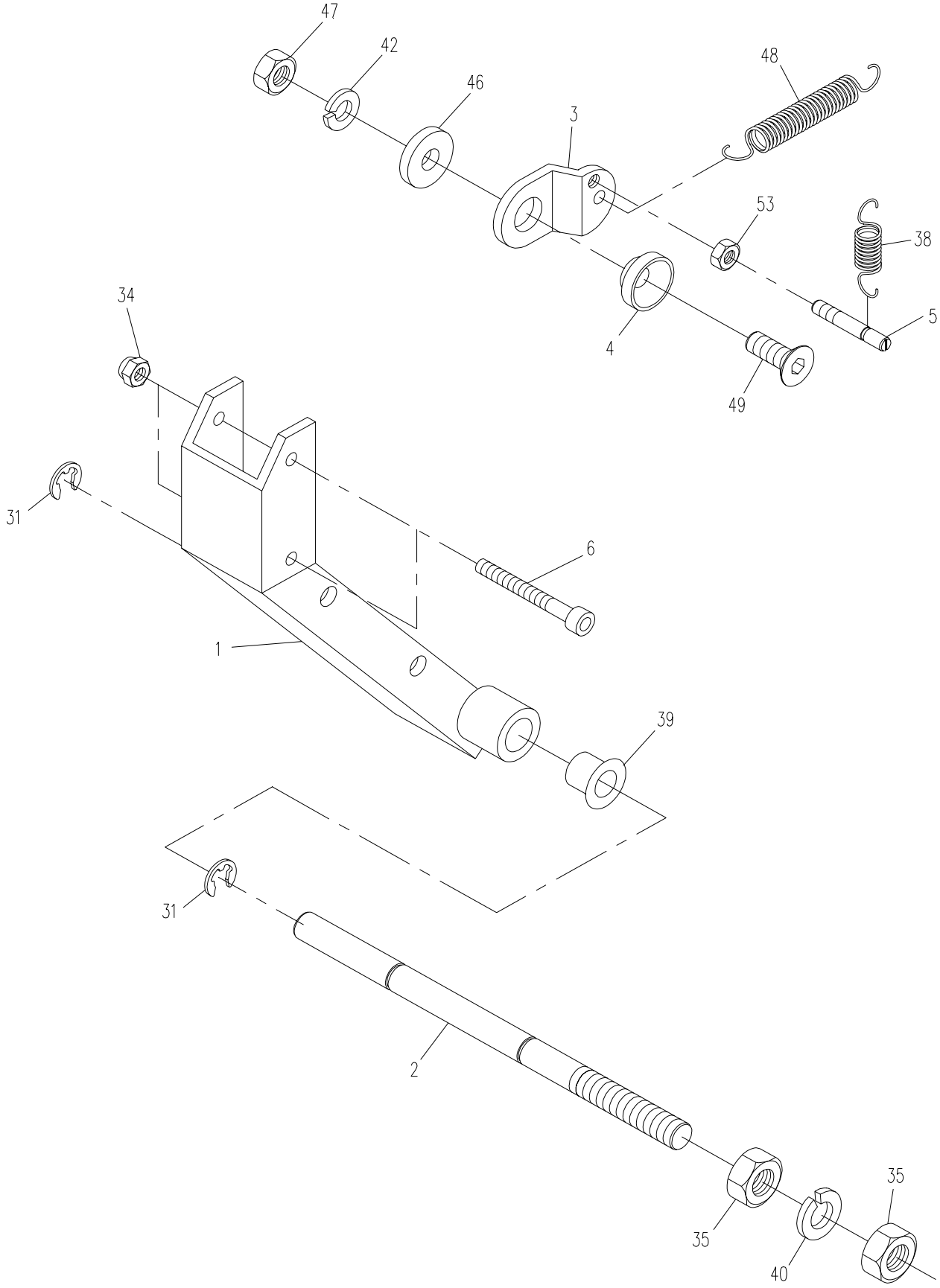

HEATER ARM ASSEMBLY				
2601-0170-00				
Item	**Part Number:**	**Description:**	**Qty:**	**Notes:**
1	26001-0171-00	Heater Arm Complete	1	
2	2601-0170-08	Arm Shaft	1	
3	0101-0151-03	Spring Bolt	1	
4	0101-0151-04	Bushing	1	
5	0101-0151-05	Spring Pin	1	
6	0101-0151-06	Socket Cap Screw	2	
31	NT 406	Snap Ring	2	
34	NT 474	Nylock Nut	2	
35	NT 16	Hex Nut	2	
38	NT 2203 **	Tension Spring	1	
39	NT 1634	Collar Bushing	2	
40	NT 61	Lock Washer	1	
42	NT 66	Lock Washer	1	
46	NT 339	Flat Head Screw	1	
47	NT 14	Hex Nut	1	
48	NT 1923 **	Tension Spring	1	
49	NT 69	Flat Head Screw	1	
53	NT 13	Hex Nut	1	

SLIDE PLATE LEVER ASSEMBLY

1620-018000-00 10/28/96

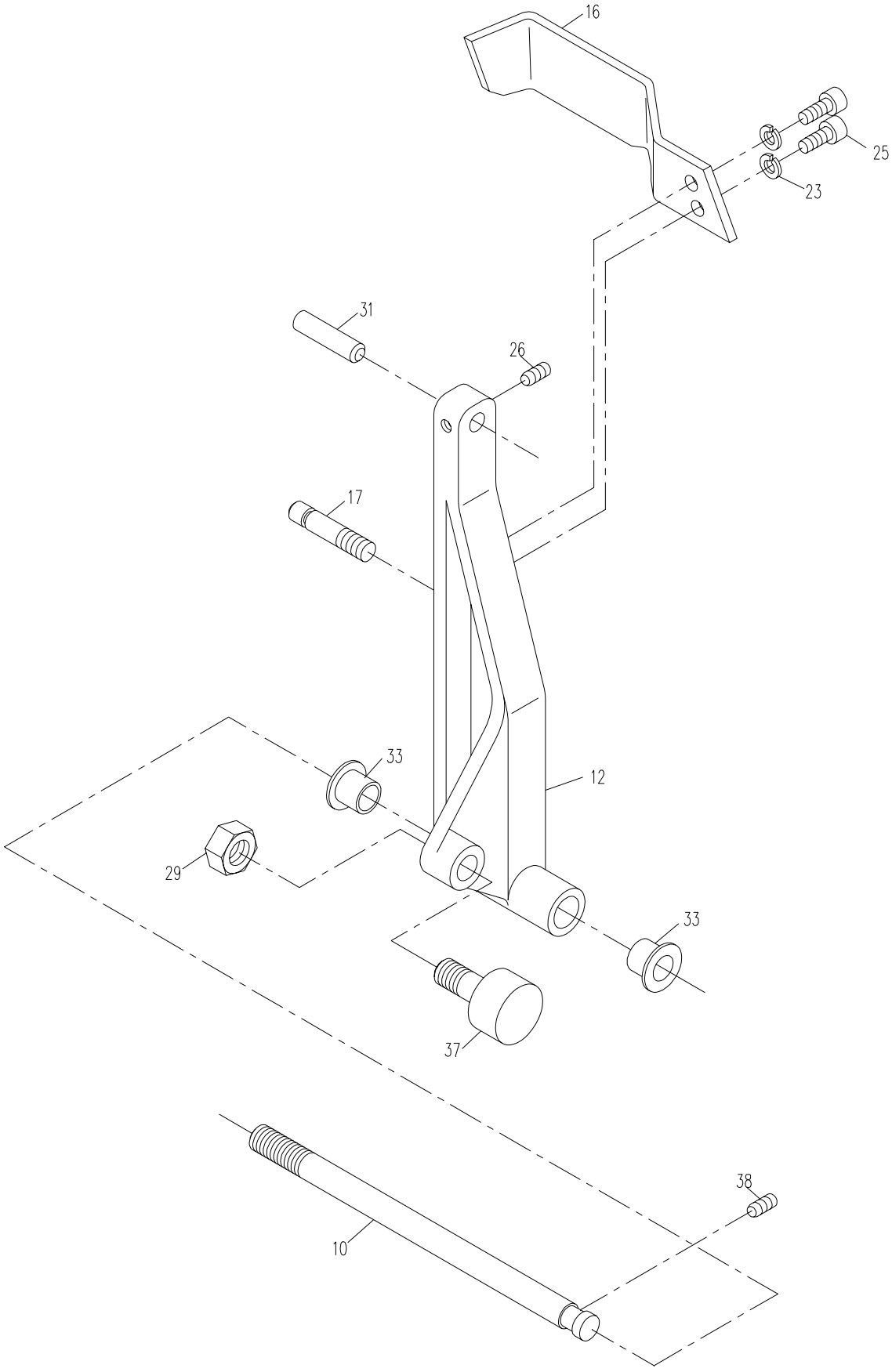

SLIDE PLATE LEVER ASSEMBLY				
1620-018000-00				
Item	**Part Number:**	**Description:**	**Qty:**	**Notes:**
10	1620-0180-10	Shaft	1	
12	1620-0180-12	Slide Plate Lever	1	
16	0401-0121-01	Sensor Flag	1	
17	0101-0130-11	Spring Pin	1	
23	NT 176	Lock Washer	2	
25	NT 1706	Socket Cap Screw	2	
26	NT 891	Set Screw	1	
29	NT 16	Hex Nut	1	
31	NT 555	Dowel Pin	1	
33	NT 1634	Flange Bushing	2	
37	NT 568	Cam Follower	1	
38	NT 29	Set Screw	1	

CASTER FRAME ASSEMBLY

500-600-800-1000 MACHINES 1620-021000-00 6/18/1998

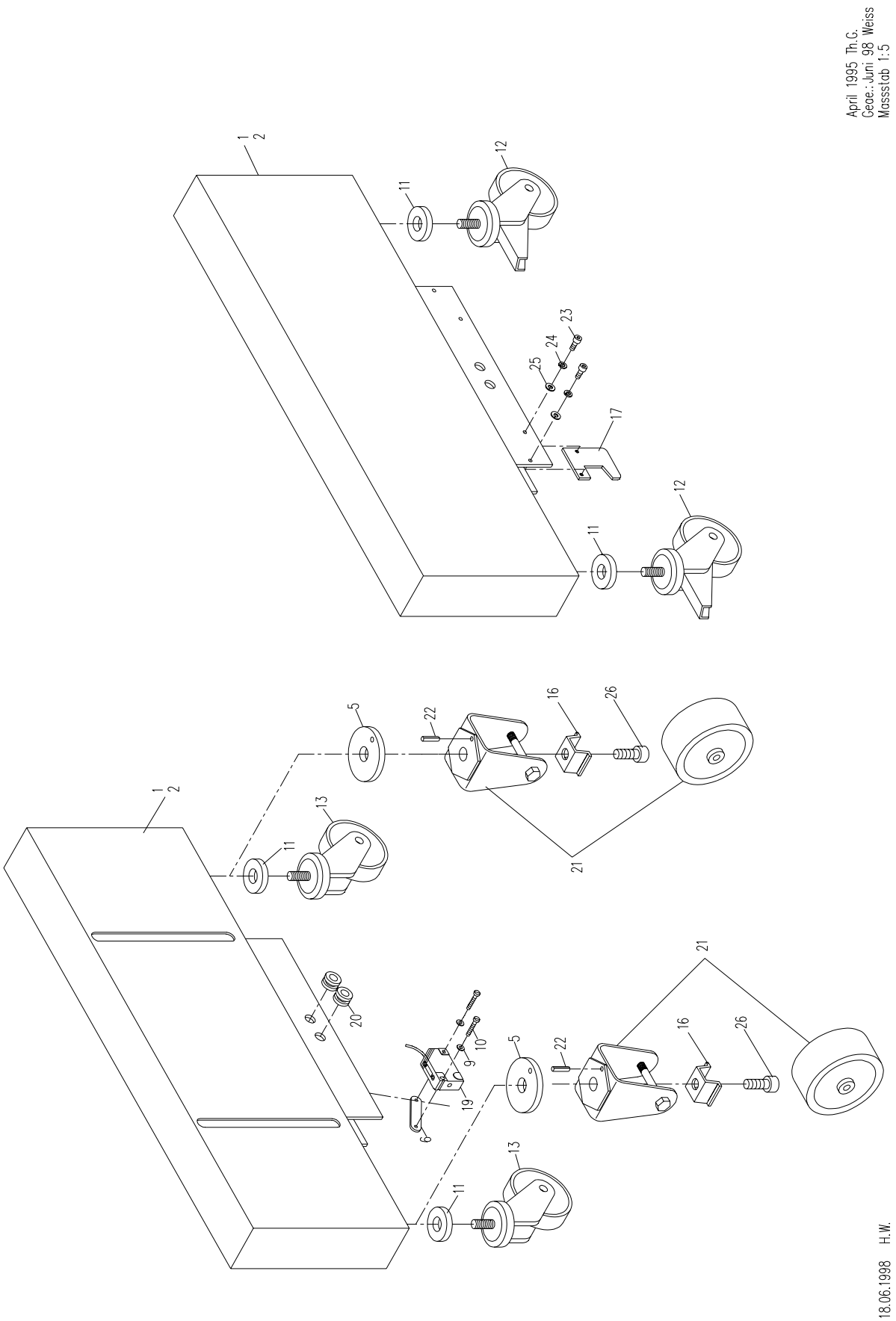

CASTER FRAME ASSEMBLY				
500, 600, 800, 1000 MACHINES 1620-021000-00				
Item	**Part Number:**	**Description:**	**Qty:**	**Notes:**
1	1620-021100-00	Frame Assembly Right	2	
2	1699-0201100-10	Frame Assembly Left	2	
5	1699-020100-10	Washer	2	
6	0401-010000-03	Nut Plate	1	
9	NT 32	Washer	2	
10	NT 490	Socket Cap Screw	2	
11	1620-021000-10	Washer	4	
12	NT 2364	Caster with Brake	2	
13	NT 2412	Caster without Brake	2	
16	1620-021000-16	Caster Reinforcement	2	
17	1620-021000-17	Restriction Plate	1	
19	ME 2247 **	Proximity Sensor	1	
20	ME 1444	Bushing 8mm	1	
21	NT 2412	Caster Non-Swivel	2	
22	NT 64	Roll Pin	2	
23	NT 1706	Socket Cap Screw	2	
24	NT 176	Lock Washer	2	
25	NT 72	Washer	2	
26	NT 647	Socket Cap Screw	2	

FOOT PEDAL ASSEMBLY

500-600-800 MACHINES 1620-0220-00 12/20/95

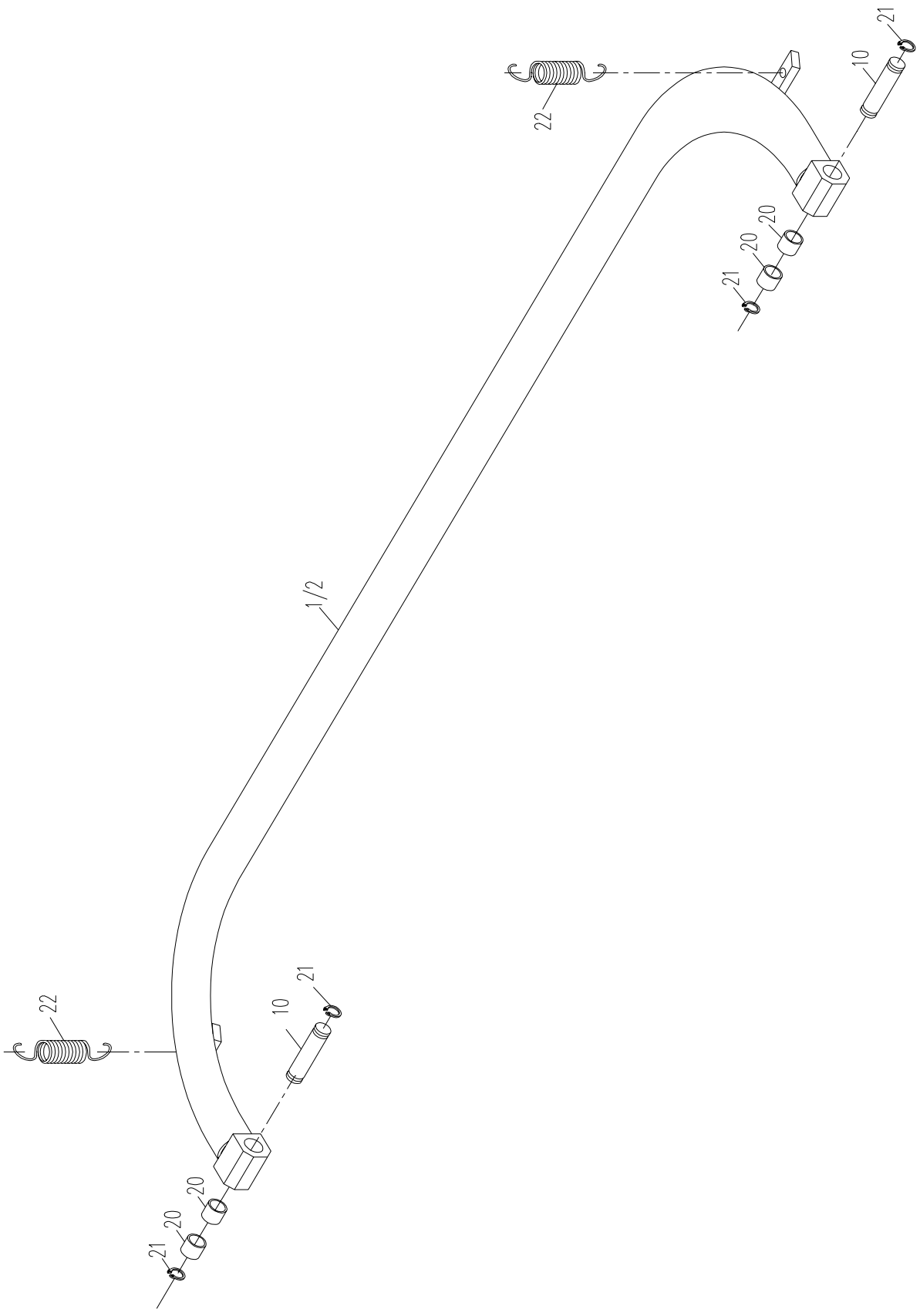

FOOT PEDAL ASSEMBLY				
500 & 600	**1620-0220-00**			
800	**1630-0220-00**			
Item	**Part Number:**	**Description:**	**Qty:**	**Notes:**
1	1620-0221-00	Foot Rail Assembly **500 & 600**	1	
2	1630-0221-00	Foot Rail Assembly **800**	1	
10	1601-0220-10	Shaft	2	
20	NT 1039	Bushing 8mm	4	
21	NT 43	Retaining Ring	4	
22	NT 697 **	Tension Spring	2	

SIDE PANELS & REAR COVER ASSEMBLY

500-600-800 MACHINES 1620-0230-00 1/30/98

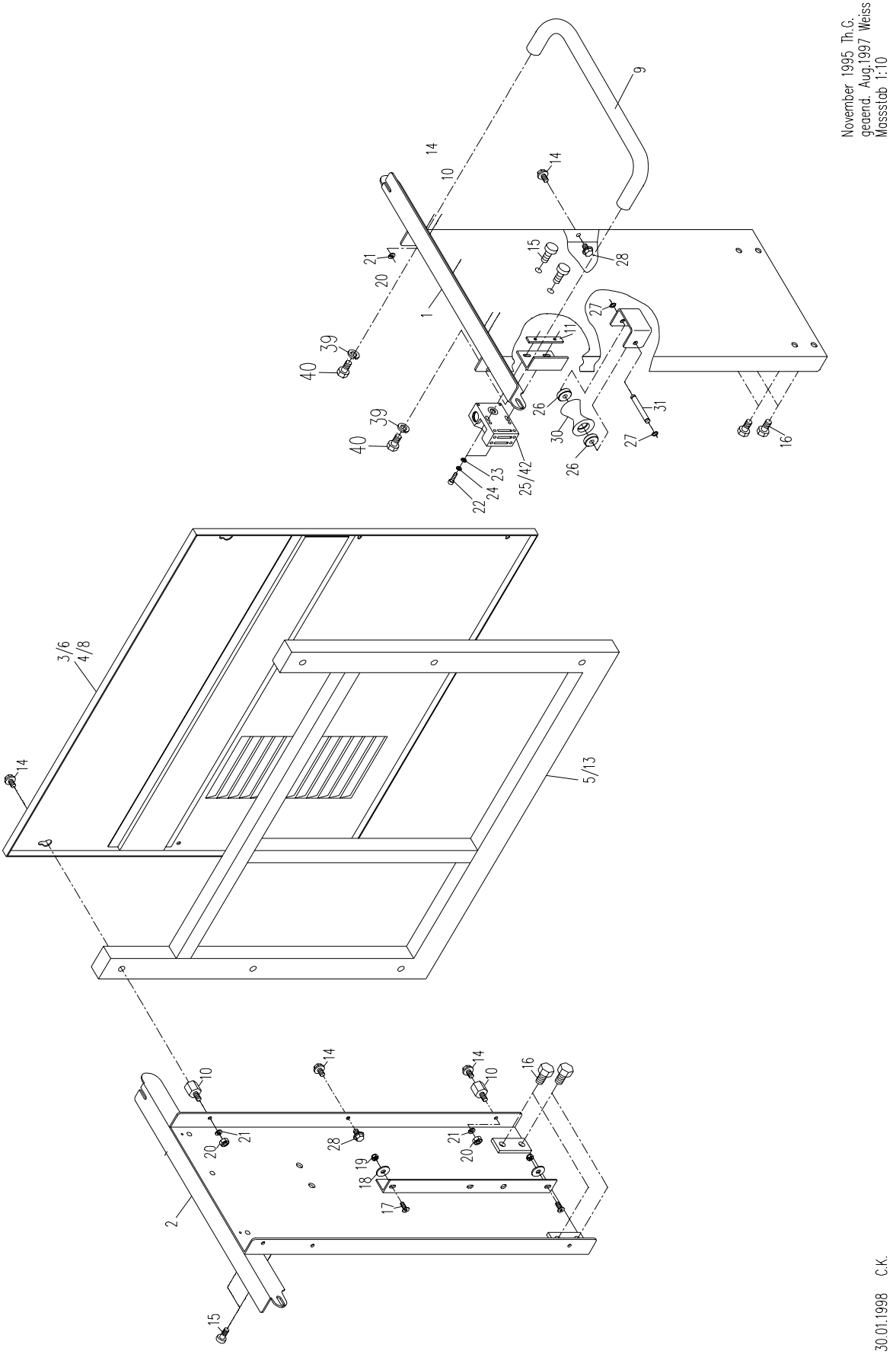

SIDE PANELS & REAR COVER ASSEMBLY

500 & 600 1620-0230-00

800 1630-0230-00

Item	Part Number:	Description:	Qty:	Notes:
1	1620-0231-00	Right Side Plate Assembly	1	
2	1620-0232-00	Left Side Plate Assembly	1	
3	1620-0233-00	Rear Cover Assembly	1	**500 & 600**
4	1620-0234-00	Rear Cover Roller Assembly	1	**500 & 600**
5	1620-0236-00	Support Bar	1	**500 & 600**
6	1630-0233-00	Rear Cover Assembly	1	**800**
8	1630-0234-00	Rear Cover Roller Assembly	1	**800**
9	NT 2623	Hand Rail	1	
10	2101-1200-22	Stand Off	6	
11	1620-0230-11	Nut Plate	1	
13	1630-0235-00	Support Bar	1	**800**
14	NT 737	Lock Bolt	6	
15	NT 2108	Button Head Screw	4	
16	NT 228	Hex Screw	8	
17	NT 1124	Flat Head Screw	2	
18	NT 822	Washer	2	
19	NT 535	Nylock Nut	2	
20	NT 14	Hex Nut	6	
21	NT 66	Lock Washer	6	
22	NT 290	Socket Cap Screw	2	
23	NT 12	Washer	2	
24	NT 74	Lock Washer	2	
25	ME 1823	Safety Switch	1	Schmersal ( )
26	NT 46	Bearing	2	
27	NT 3	Retaining Ring	2	
28	NT 738	Lock Bolt	1	
30	0401-0200-37	Dispenser Idler Roller	1	
31	0401-0200-38	Shaft	2	
39	NT 87	Lock Washer	2	
40	NT 228	Hex Screw	2	
42	ME 2587	Safety Switch	1	Bernstein ( )

FRONT DOOR & EXTENSION COVER ASSEMBLY

500-600 MACHINES 1620-0240-00 6/3//97

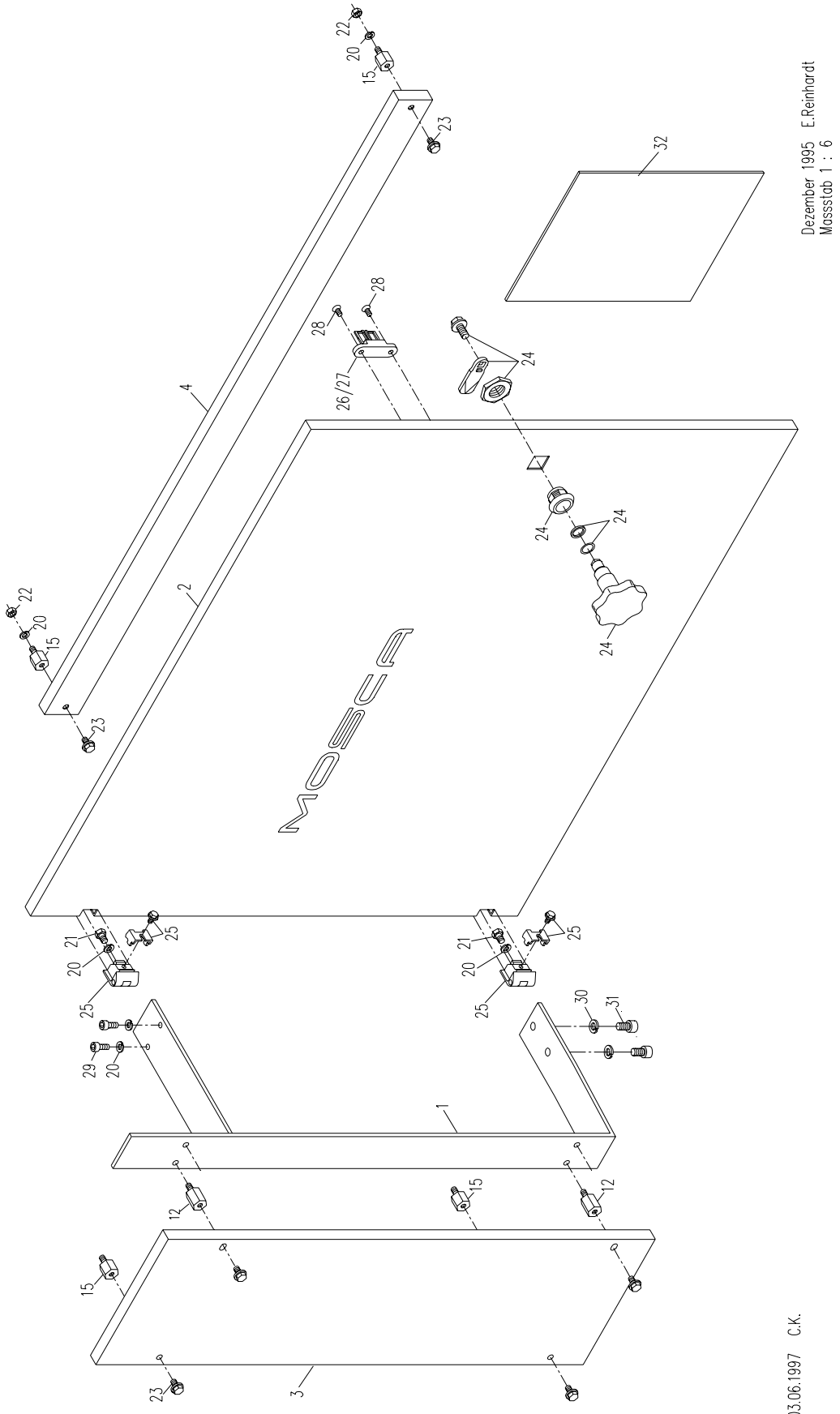

FRONT DOOR & EXTENSION COVER ASSEMBLY				
500 & 600 1620-0240-00				
Item	**Part Number:**	**Description:**	**Qty:**	**Notes:**
1	1620-0241-00	Front Door Complete	1	
10	1620-0240-10	Support Bar	1	
11	2101-1200-22	Stand Off	2	
14	NT 737	Lock Screw	2	
15	NT 1209D	Lock Complete with Knob	1	
16	NT 1764	Door Hinge	2	
17	ME 1825 **	Safety Switch Actuator	1	Schmersal ( )
19	NT 571	Flat Head Screw	2	
20	NT 66	Lock Washer	4	
21	NT 175	Hex Screw	2	
22	NT 14	Hex Nut	2	
23	ME 1191	Vinyl Data Pocket	1	
24	ME 2683 **	Safety Switch Actuator	1	Bernstein ( )

TABLE PLATE ASSEMBLY

500-600- 800 MACHINES 1630-0250-00 5/29/96

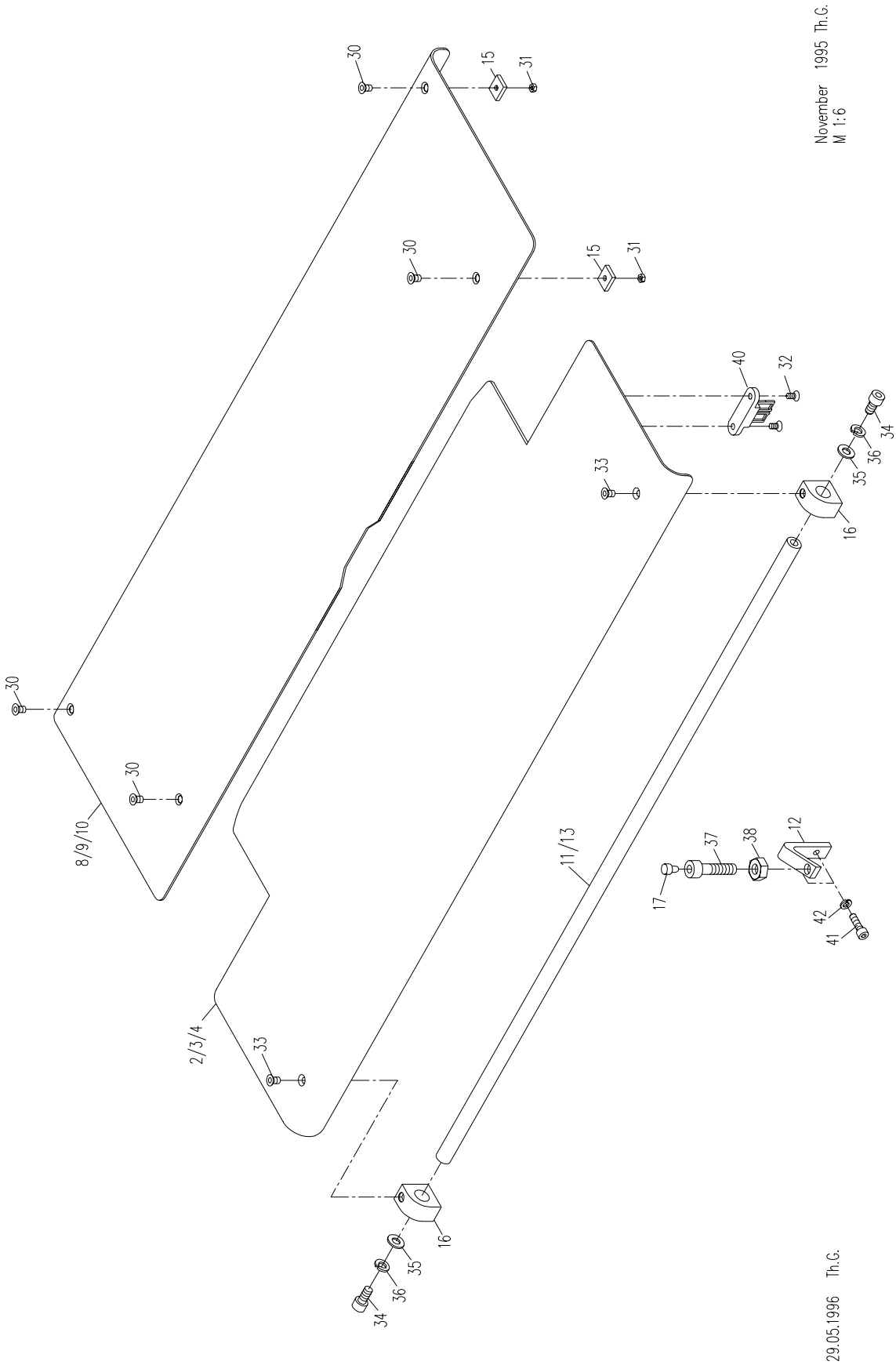

TABLE PLATE ASSEMBLY Corning				
1630-0250-00-A				
Item	**Part Number:**	**Description:**	**Qty:**	**Notes:**
4	1630-0251-00	Front Table Plate **800**	1	
10	1630-0250-10	Rear Table Plate **800**	1	
12	1622-0250-11	Table Support	1	
13	1630-0250-11	Shaft **800**	1	
15	0401-0210-09	Nut Plate	4	
16	0120-0200-12	Hinge Block	2	
17	0101-0100-17	Table Bumper	1	
30	NT 439	Flat Head Screw	4	
31	NT 535	Nylock Nut	4	
32	NT 571	Flat Head Screw	2	
33	NT 390	Flat Head Screw	2	
34	NT 81	Socket Cap Screw	2	
35	NT 15	Washer	2	
36	NT 61	Lock Washer	2	
37	NT 266	Socket Cap Screw	1	
38	NT 239	Hex Nut	1	
40	ME 1825	Switch Actuator	1	
41	NT 171	Socket Cap Screw	2	
42	NT 66	Lock Washer	2	

CENTER FRAME ASSEMBLY

500-600 MACHINES 1620-0260-00 11/27/96

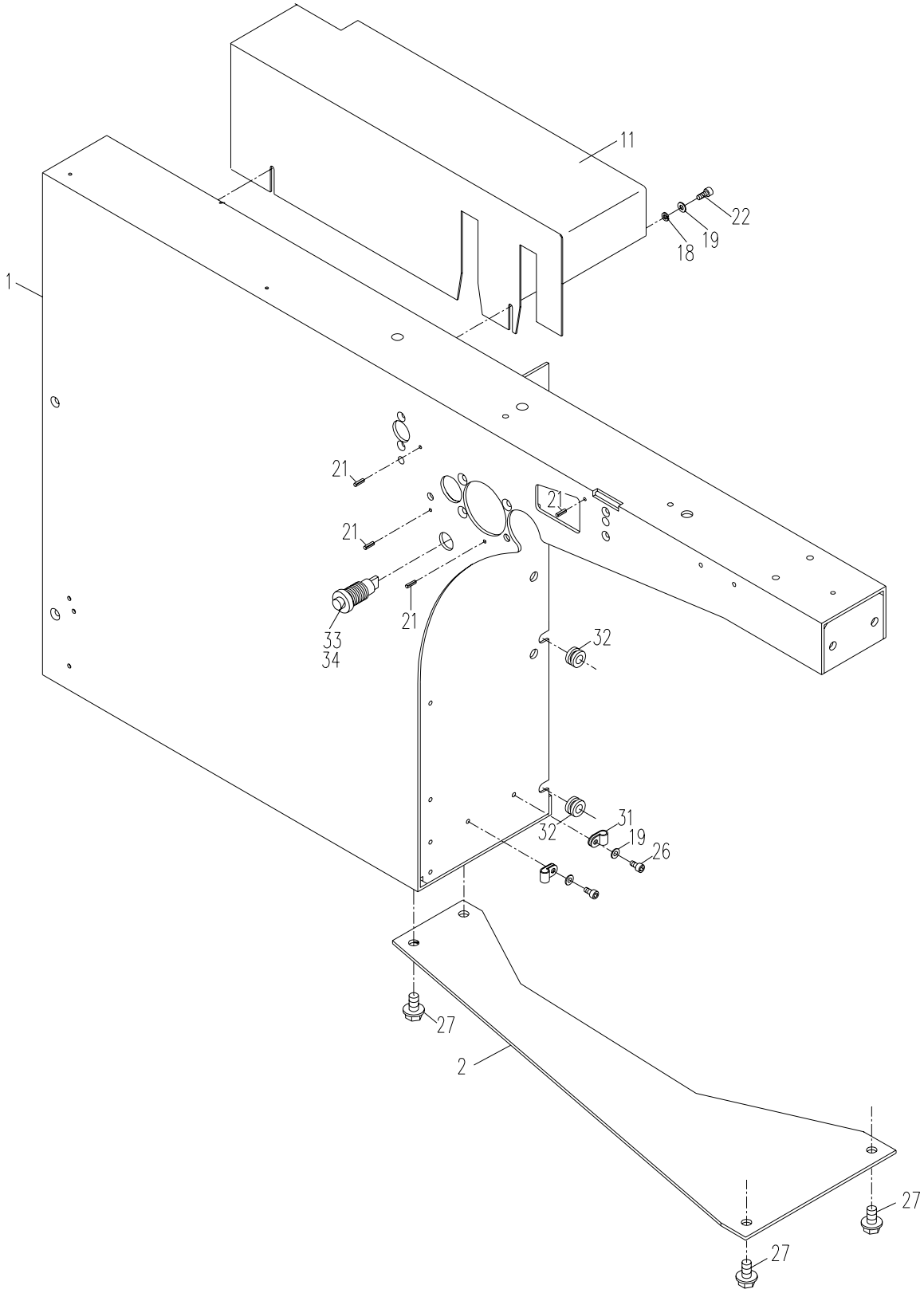

18.01.1996 Th.G.

August 1995, Th.G.
Massstab 1:7

CENTER FRAME ASSEMBLY				
500 & 600 1620-0260-00				
Item	**Part Number:**	**Description:**	**Qty:**	**Notes:**
1	1620-0261-00	Frame Complete	1	
2	1620-0262-00	Support Plate Complete	1	
11	1620-0260-11	Cover	1	
18	NT 176	Lock Washer	4	
19	NT 72	Washer	2	
21	NT 180	Roll Pin	4	
22	NT 179	Socket Cap Screw	2	
26	NT 95	Socket Cap Screw	2	
27	NT 1149	Lock Screw	4	
31	ME 1356	Cable Clamp	2	
32	ME 1444	Bushing 8mm	2	
33	ME 1791	Push Button	1	
34	ME 771	Cover	1	

DISPENSER ASSEMBLY

1601-0310-00 10/6/97

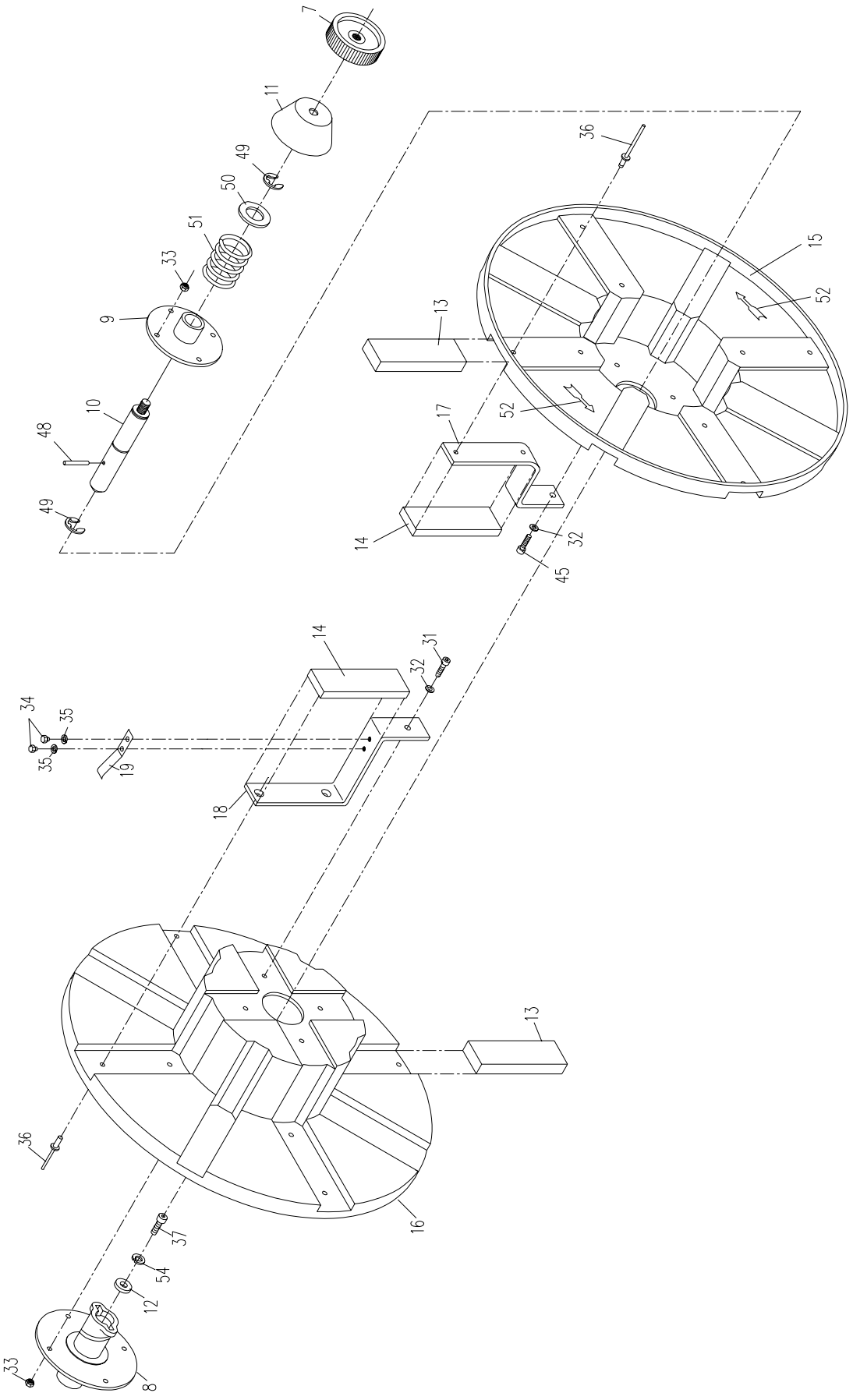

DISPENSER ASSEMBLY				
1601-0310-00				
Item	**Part Number:**	**Description:**	**Qty:**	**Notes:**
7	1601-0310-09	Knob	1	
8	1601-0310-10	Bayonet Plate	1	
9	1601-0310-11	Guide Bushing	1	
10	1601-0310-12	Bayonet Shaft	1	
11	1601-0310-13	Bell Housing	1	
12	1601-0310-15	Washer	1	
13	0101-0300-19	Dispenser Foam Pad - Thick	8	
14	1601-0310-17	Dispenser Foam Pad - Thin	8	
15	1601-0310-18	Front Disc	1	
16	1601-0310-19	Rear Disc	1	
17	1601-0310-20	Front Brace	4	
18	1601-0310-21	Rear Brace	4	
19	1601-0310-22	Leaf Spring	4	
31	NT 184	Socket Cap Screw	8	
32	NT 12	Washer	8	
33	NT 535	NyLock Nut	8	
34	NT 932	Hex Screw M5x6	8	
36	NT 1398	Rivet	16	
37	NT 81	Socket Cap Screw	1	
48	NT 1397	Dowel Pin	1	
49	NT 50	Snap Ring	2	
50	NT 993	Washer	1	
51	NT 660	Compression Spring	1	
52	NT 612	Arrow	4	
54	NT 61	Lock Washer	1	

DISPENSER SUPPORT ASSEMBLY

1620-032000-00 6/17/96

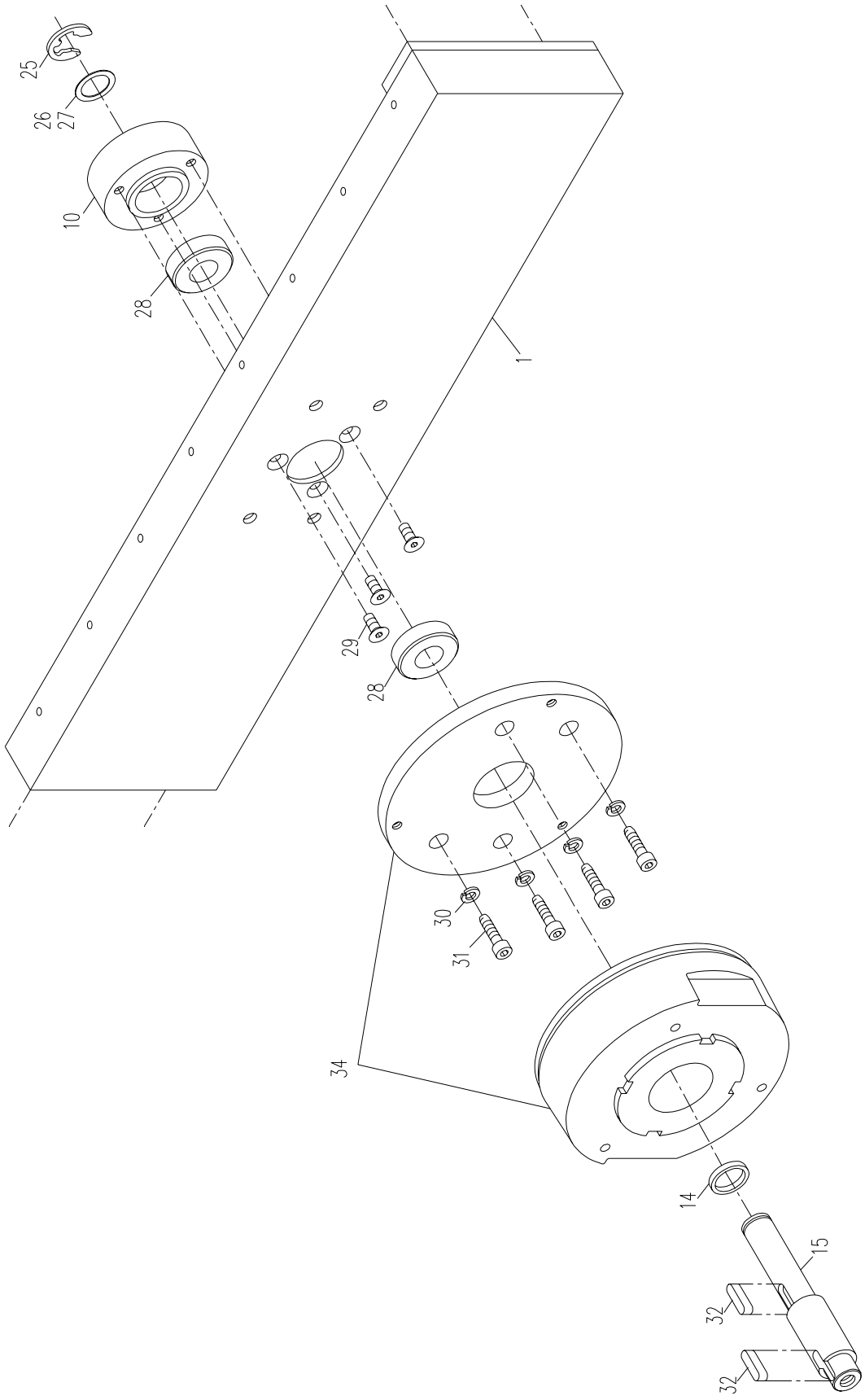

November 1995 E.Reinhardt
Massstab 1 : 4

29.11.1995 E.R.

DISPENSER SUPPORT ASSEMBLY				
1620-032000-00				
Item	**Part Number:**	**Description:**	**Qty:**	**Notes:**
1	1620-0321-00	Brake Support Complete	1	
10	1620-0320-10	Bearing Block	1	
14	0401-0300-08	Spacer Ring	1	
15	0401-0300-07	Shaft	1	
25	NT 102	E-clip	1	
26	NT 681	Spacer Ring	1	
27	NT 717	Spacer Ring	1	
28	NT 192	Bearing Block	2	
29	NT 85	Flat Head Screw	3	
30	NT 74	Lock Washer	4	
31	NT 8	Socket Cap Screw	4	
32	NT 35	Key	2	
34	ME 46E00	Brake (KEB)	1	

ACCUMULATOR FILL ASSEMBLY

1620-0710-00 2/19/97

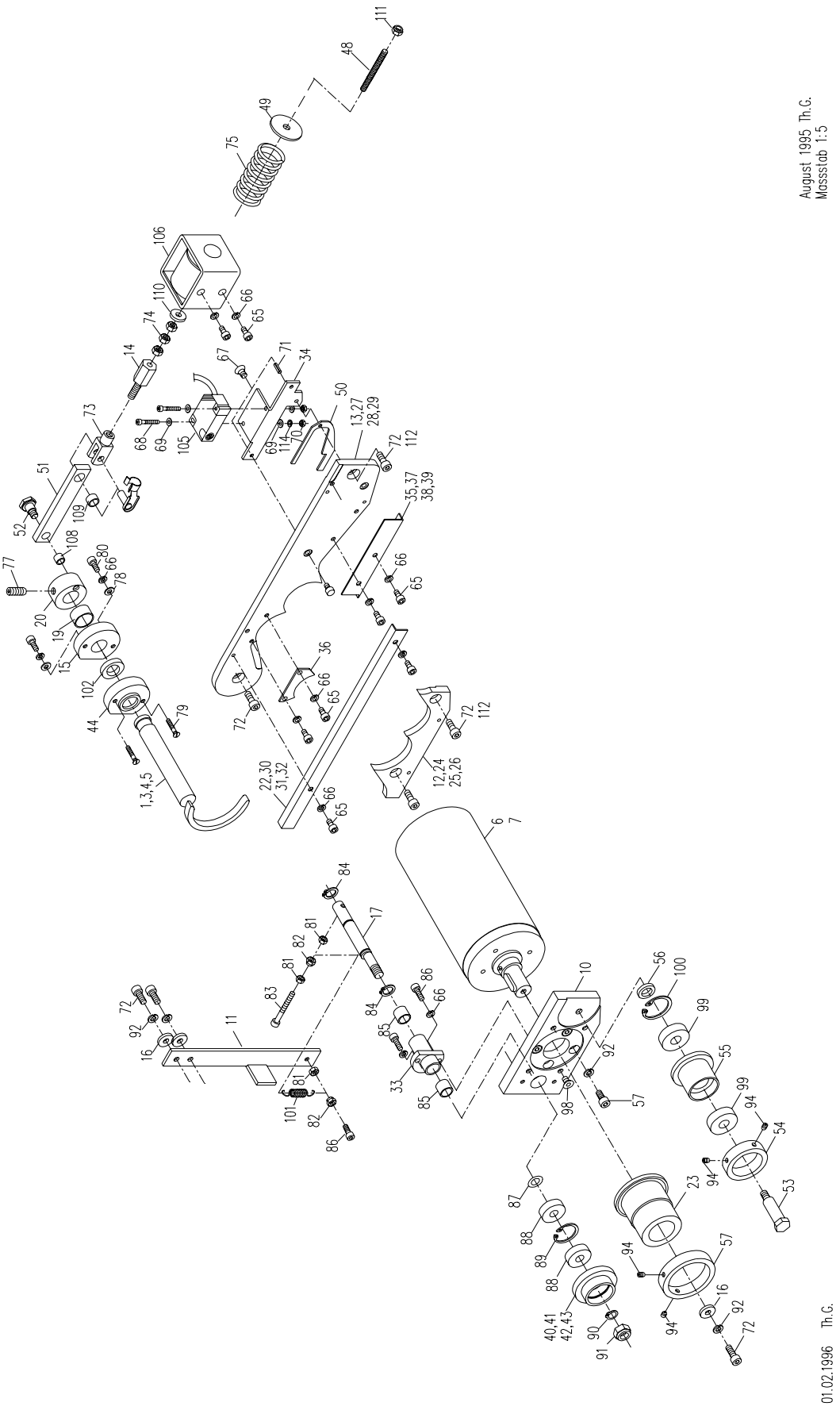

ACCUMULATOR FILL ASSEMBLY				
1620-0710-00 (5-6mm Strap)				
Item	**Part Number:**	**Description:**	**Qty:**	**Notes:**
1	1620-0711-00	Strap Threading Gate Complete	1	5-6mm Strap
6	1620-0716-00	Motor 60 V. DC (DUNKER)	1	
7	1620-071700-00	Motor 60 V. DC (GEFEG)	1	
10	1620-0710-10	Motor Support	1	
11	1620-0710-11	Stop Bar	1	
12	1620-0710-12	Strap Guide	1	5-6mm Strap
13	1620-0710-13	Strap Guide	1	5-6mm Strap
14	1620-0710-14	Stand Off	1	
15	1620-0710-15	Flanged Bearing Housing	2	
16	0101-0140-48	Spacer Washer	1	
17	1620-0710-17	Eccentric Shaft	1	
19	1620-0710-19	Spacer Ring	1	
20	1620-0710-20	Adjustment Collar	1	
22	1620-0710-22	Strap Cover	1	5-6mm Strap
23	1620-0710-23	Drive Roller	1	
33	1620-0710-33	Flanged Bushing Housing	1	
34	1620-0710-34	Sensor Bracket	1	
35	1620-0710-35	Strap Guide	1	5-6mm Strap
36	1620-0710-36	Cover Plate	1	
40	1620-0710-40 **	Pressure Roller	1	5-6mm Strap
44	1620-0710-44	Bushing	1	
48	1699-0162-12	Threaded Rod	1	
49	2601-0700-20	Retaining Washer	1	
50	2601-0730-16	Auto Feed Sensor Actuator	1	
51	2601-0700-17	Connecting Link	1	
52	0401-0810-23	Shoulder Bolt	1	
53	0401-0710-12	Shoulder Bolt	1	
54	0401-0710-11	Collar	1	
55	0401-0710-10	Guide Roller	1	
56	0401-0710-18	Spacer Ring	1	
57	0401-0710-09	Collar	1	
65	NT 95	Socket Cap Screw	8	
66	NT 176	Lock Washer	12	
67	NT 939	Flat Head Screw	2	
68	NT 877	Socket Cap Screw	2	
69	NT 32	Washer	2	
70	NT 339	Hex Nut	2	
71	NT 2150	Roll Pin	1	
72	NT 8	Socket Cap Screw	7	
73	NT 532	Clevis with Safety	1	
74	NT 48	Hex Nut	3	
75	NT 1361	Compression Spring	1	
77	NT 642	Set Screw	1	
78	NT 72	Washer	2	
79	NT 871	Flat Head Screw	2	
80	NT 1706	Socket Cap Screw	2	
81	NT 13	Hex Nut	3	
82	NT 474	Nylock Nut	1	
83	NT 117	Socket Cap Screw	1	
84	NT 43	Retaining Ring	2	
85	NT 52	DU-Bushing	2	

ACCUMULATOR FILL ASSEMBLY				
1620-0710-00 (5-6mm Strap)				
Item	**Part Number:**	**Description:**	**Qty:**	**Notes:**
86	NT 92	Socket Cap Screw	3	
87	NT 461	Spacer	1	
88	NT 46 **	Bearing	2	
89	NT 45	Snap Ring	1	
90	NT 3	E-Clip	1	
91	NT 458	Nylock Nut	1	
92	NT 74	Lock Washer	3	
94	NT 973	Set Screw	4	
97	NT 556	Socket Cap Screw	8	
98	NT 85	Flat Head Screw	3	
99	NT 156 **	Bearing	2	
100	NT 344	Snap Ring	1	
101	NT 1509 **	Tension Spring	1	
102	NT 2324	Bearing	1	
105	ME 2247	Proximity Sensor	1	
106	ME 1247 **	Solenoid 24 V. DC	1	
108	NT 757	Bushing	1	
109	NT 699	Bushing	1	
110	NT 2292	Washer	1	
111	NT 445	Nylock Nut	1	
112	NT 76	Socket Cap Screw	4	
114	NT 533	Lock Washer	2	

ACCUMULATOR ASSEMBLY

500-600 MACHINE 1620-0730-00 6/19/97

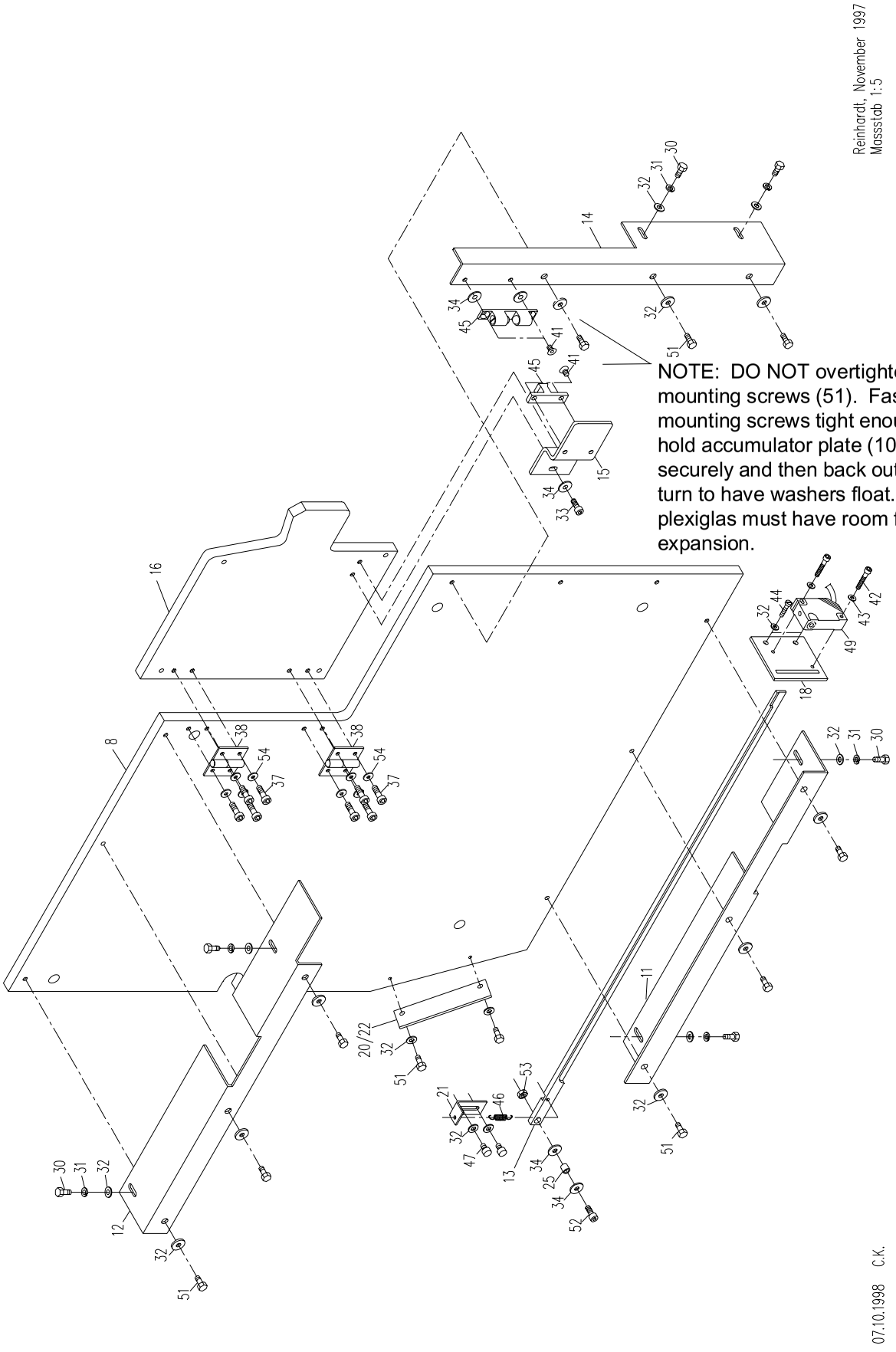

ACCUMULATOR ASSEMBLY				
500 & 600 1620-0730-00				
Item	**Part Number:**	**Description:**	**Qty:**	**Notes:**
8	1620-073000-10	Accumulator Front Cover 10mm Thick	1	
9	1620-073000-11	Accumulator Door 10mm Thick	1	
10	1620-072000-10	Accumulator Front Cover 8mm Thick	1	
11	1620-072000-11	Accumulator Door 8mm Thick	1	
12	1620-072000-12	Right Support Angle	1	
13	1620-072000-13	Bottom Support Angle	1	
14	1620-072000-14	Top Support Angle	1	
15	1699-072100-15	Latch	1	
17	1620-072000-17	Sensor Actuator Lever	1	
18	1620-072000-18	Proximity Sensor Bracket	1	
21	1620-072000-21	Spring Adjustment Angle	1	
22	1620-073000-22	Support Angle for 10mm Cover	1	
22	1620-0720-22	Support Angle for 8mm Cover	1	
25	0401-070000-19	Bushing	1	
30	NT 653	Hex Screw	8	
31	NT 176	Lock Washer	6	
32	NT 72	Washer	12	
33	NT 27	Socket Cap Screw	1	
34	NT 309	Washer	5	
37	NT 2644	Socket Cap Screw	8	
38	NT 692	Hinge	2	
41	NT 939	Flat Head Screw	4	
42	NT 691	Socket Cap Screw	2	
43	NT 32	Washer	2	
44	NT 95	Socket Cap Screw	2	
45	NT 1211	Latch Support	1	
46	NT 2331 **	Tension Spring	1	
47	NT 162	Socket Cap Screw	2	
49	ME 2247	Proximity Sensor	1	
51	NT 2643	Hex Screw	11	
52	NT 203	Socket Cap Screw	1	
53	NT 13	Hex Nut	1	
54	NT 870	Washer	8	

OUTER STRAP TRACK ASSEMBLY

500/400 MACHINE 1621-0810-00 9/29/97

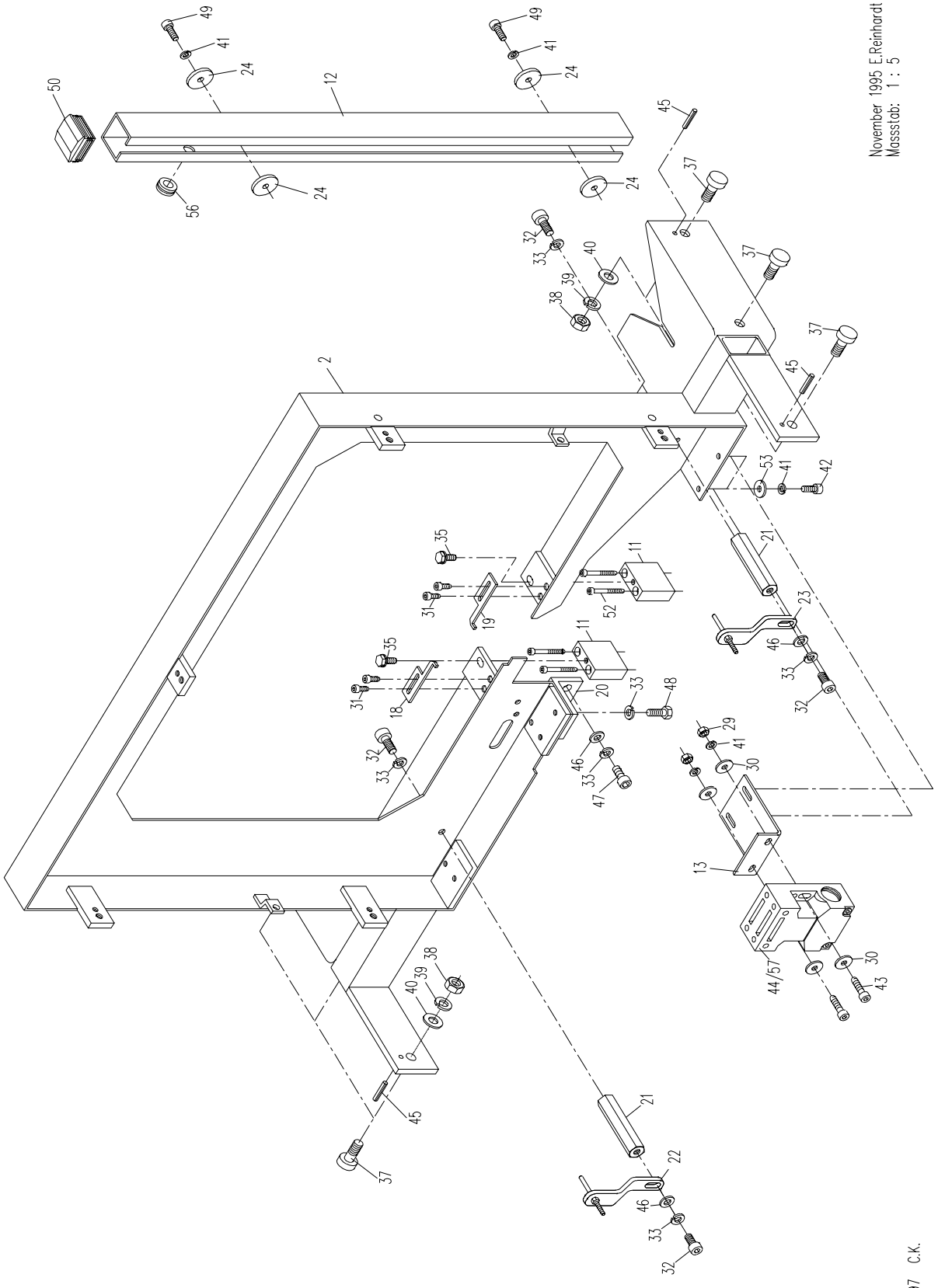

OUTER STRAP TRACK ASSEMBLY				
500/400 1621-0810-00				
Item	**Part Number:**	**Description:**	**Qty:**	**Notes:**
2	1621-0811-00	Outer Strap Track **500/400**	1	
11	1620-0810-16	Spacer	2	
12	1621-1140-10	Cable Channel **500/400**	1	
13	1620-0810-13	Safety Switch Support Plate	1	
18	1601-0800-25 **	Left Stripper	1	
19	1601-0800-56 **	Right Stripper	1	
20	1601-0800-23	Support Angle	1	
21	1601-0800-07	Spacer Bolt	2	
22	1601-0810-60 **	Ejector Pin Bracket Complete	1	
23	1620-0810-60 **	Ejector Pin Bracket Complete	1	
24	0101-0140-48	Washer	4	
29	NT 48	Hex Nut	2	
30	NT 12	Washer	4	
31	NT 41	Socket Cap Screw	4	
32	NT 44	Socket Cap Screw	4	
33	NT 66	Lock Washer	6	
35	NT 1773	Lock Screw	2	
37	NT 2108	Button Head Screw	6	
38	NT 16	Hex Nut	6	
39	NT 61	Lock Washer	6	
40	NT 15	Washer	6	
41	NT 74	Lock Washer	6	
42	NT 8	Socket Cap Screw	2	
43	NT 184	Socket Cap Screw	2	
44	ME 1823	Safety Switch	1	Schmersal ( )
45	NT 503	Roll Pin	4	
46	NT 19	Washer	4	
47	NT 322	Socket Cap Screw	1	
48	NT 1	Hex Screw	1	
49	NT 76	Socket Cap Screw	2	
50	NT 1109	Frame Cap	1	
52	NT 2365	Socket Cap Screw	4	
53	NT 822	Washer	2	
56	ME 2131	Grommet	1	
57	ME 2587	Safety Switch	1	Bernstein ( )

CONTROL PANEL ASSEMBLY

1620-1130-00 8/26/97

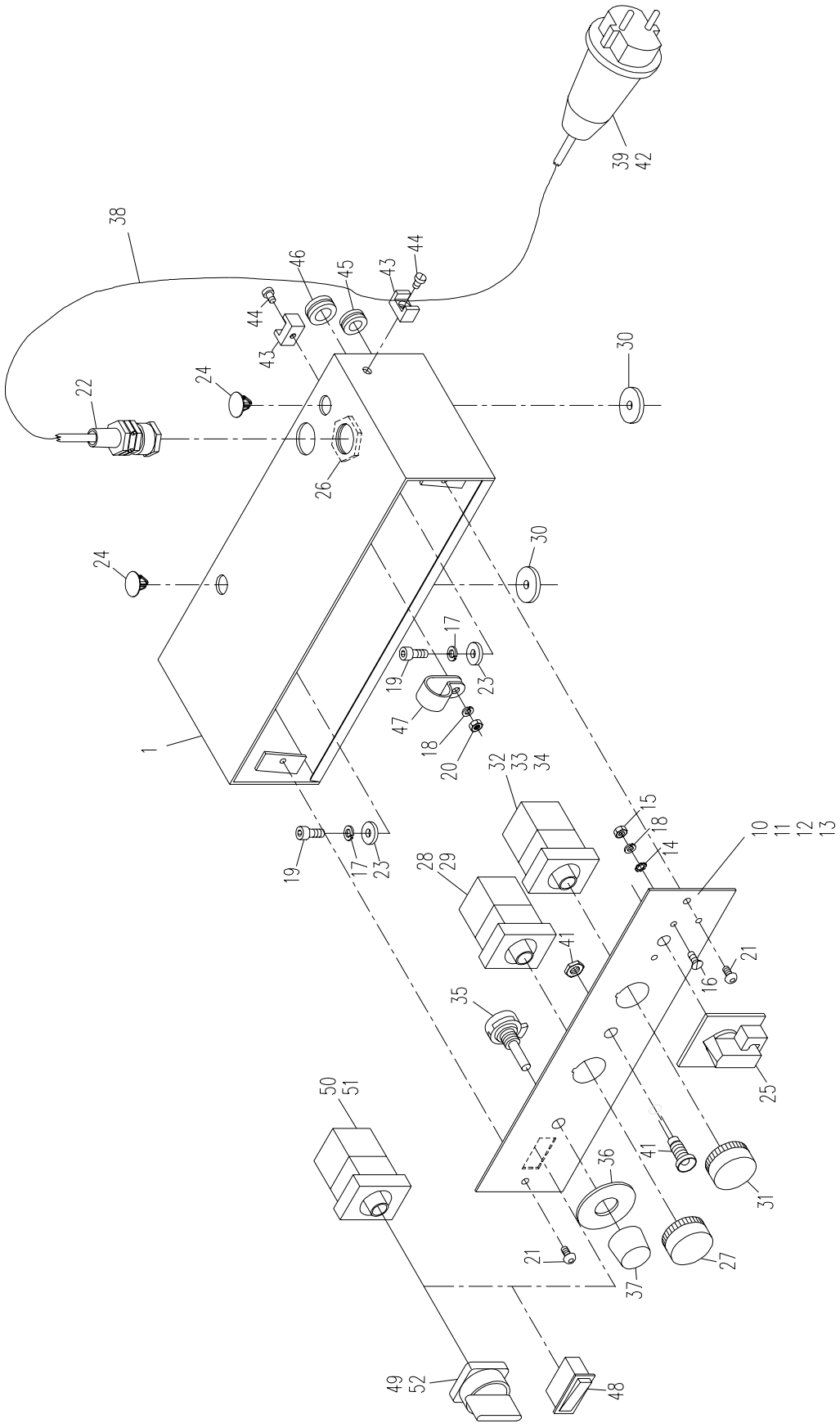

SUPPORT FRAME ASSEMBLY

500/400 1621-1401-00 2/12/1998

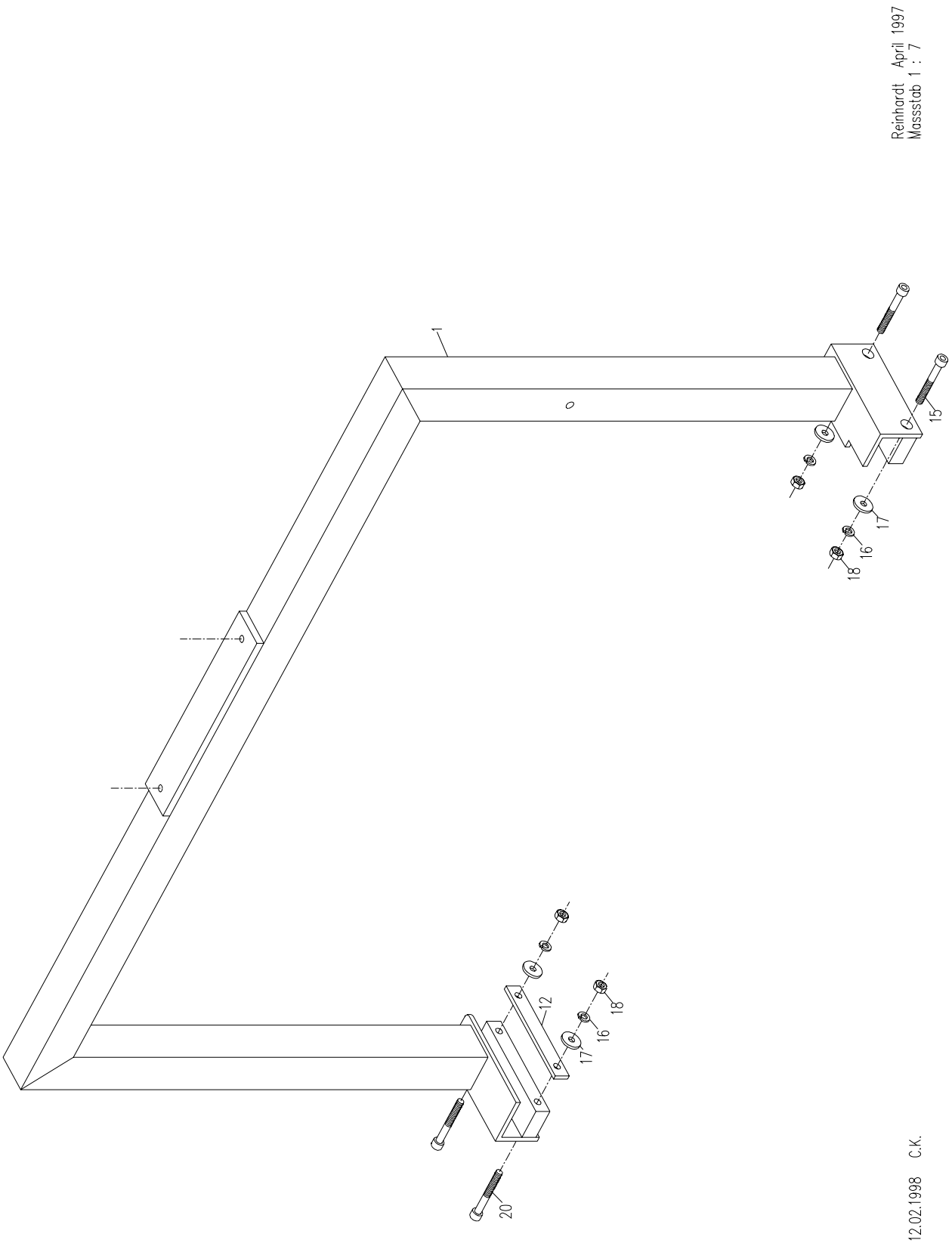

INNER STRAP TRACK ASSEMBLY

500/400 MACHINE 1621-0820-00 5/31/1999

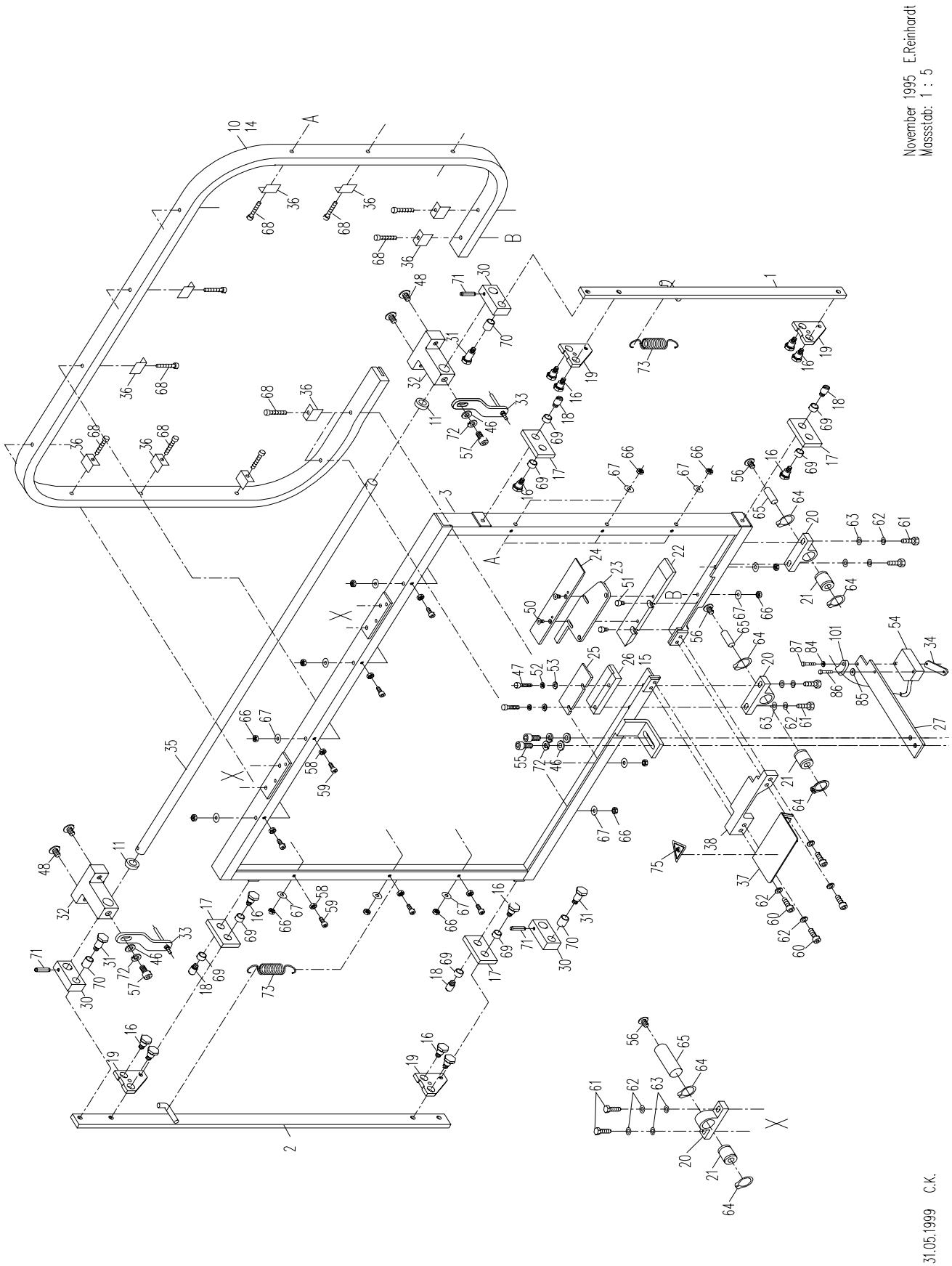

INNER STRAP TRACK ASSEMBLY

500/400 1621-0820-00 (5-6mm Strap)

Item	Part Number:	Description:	Qty:	Notes:
1	1603-0810-01	Inner Strap Track Frame **500/400**	1	
2	1621-0821-00	Right Bar Assembly **500/400**	1	
11	1620-0820-11	Collar	2	
13	1621-0820-13	Strap Track **500/400**	1	5-6mm Strap
15	1620-0820-15	Bottom Strap Guide Left	1	5-6mm Strap
17	0401-0810-21	Frame Link	4	
18	0401-0810-25	Bolt	4	
19	0401-0810-22	Pivot Plate	4	
20	0401-0810-32	Bearing Block	2	
21	0401-0810-44	Bushing	2	
22	0401-0810-27	Bottom Strap Guide - Right	1	
23	0401-0810-28	Center Strap Guide - Right	1	
24	0401-0810-26	Top Strap Guide - Right	1	
25	0401-0810-47	Top Strap Guide - Left	1	
27	0401-0810-36	Track Sensor Bracket	1	
28	0401-0810-31	Bridge	1	
29	1601-0810-31	Left Bar Assembly Complete	1	
30	0401-0810-20	Top Link	3	
31	0401-0810-24	Shoulder Bolt	3	
32	0401-0810-17	Bearing Block	2	
33	1601-0810-60	Ejector Pin Bracket Complete	2	
35	1601-0810-41	Connecting Rod	1	
36	0401-0810-45	Track Alignment Angle	10	
37	0701-0810-09	Heater Cover Plate	1	
39	0401-0810-23	Shoulder Bolt	12	
46	NT 19	Washer	4	
47	NT 346	Socket Cap Screw	2	
48	NT 1402	Flat Head Screw	4	
49	NT 691	Socket Cap Screw	2	
50	NT 5	Flat Head Screw	2	
51	NT 162	Socket Cap Screw	2	
52	NT 176	Lock Washer	2	
53	NT 72	Washer	2	
54	ME 2247	Proximity Sensor	1	
55	NT 322	Socket Cap Screw	2	
56	NT 1051	Flat Head Screw	2	
57	NT 44	Socket Cap Screw	2	
58	NT 13	Hex Nut	10	
59	NT 1706	Socket Cap Screw	10	
60	NT 98	Socket Cap Screw	4	
61	NT 94	Hex Screw	4	
62	NT 74	Lock Washer	8	
63	NT 12	Washer	4	
64	NT 637	Retaining Ring	4	
65	NT 348	Dowel Pin	2	
66	NT 474	Nylock Nut	10	
67	NT 309	Washer	10	
68	NT 1604	Flat Head Screw	10	
69	NT 699	DU-Bushing	8	
70	NT 25	DU-Bushing	3	

INNER STRAP TRACK ASSEMBLY				
500/400 1621-0820-00 (5-6mm Strap)				
Item	**Part Number:**	**Description:**	**Qty:**	**Notes:**
71	NT 64	Roll Pin	3	
72	NT 66	Lock Washer	4	
73	NT 664 **	Tension Spring	2	
75	NT 2282	Heater Warning Sign	1	

STRAP FRAME COVER ASSEMBLY

500/400 MACHINE 1621-0830-00 11/21/97

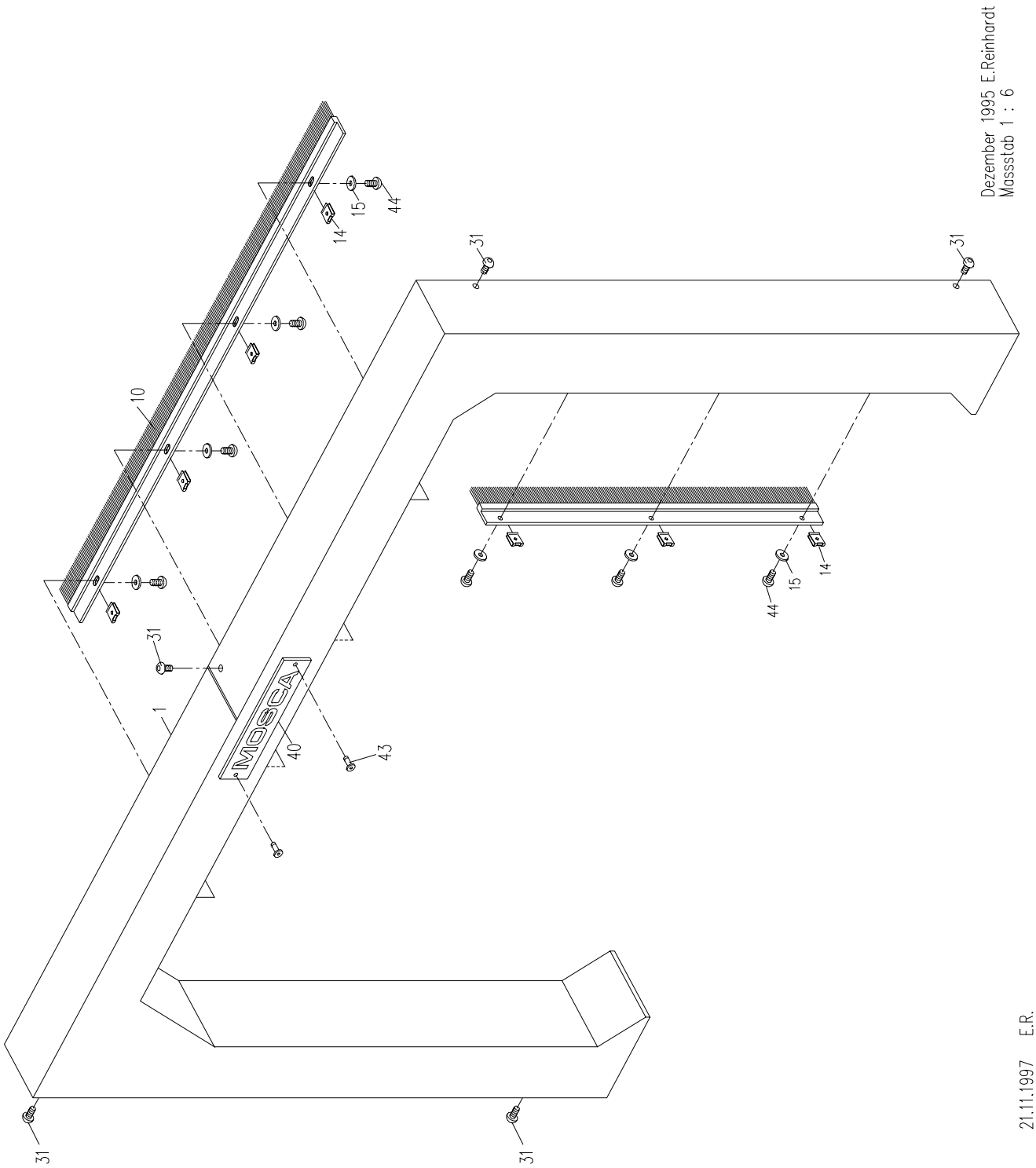

STRAP FRAME COVER ASSEMBLY

500/400 1621-0830-00

600/500 1622-0830-00

800/400 1631-0830-00

Item	Part Number:	Description:	Qty:	Notes:
2	1621-0831-00	Track Cover Assembly **500/400**	1	
3	1622-0831-00	Track Cover Assembly **600/500**	1	
4	1631-0831-00	Track Cover Assembly **800/400**	1	
8	1621-0830-13	Brush **500/400**	1	
9	1622-0830-10	Brush **600/500**	1	
10	1630-0830-10	Brush **800/400**	1	
12	1621-0830-11	Brush **500/400**	1	
13	1622-0830-11	Brush **600/500**	1	
14	NT 2597	Brush Clip	6	
15	NT 797	Washer	6	
16	1621-0830-11	Brush **800/400**	1	
31	NT 1051	Buttonhead Screw	5	
40	NT 1815	Manufacturer's Sign	1	
43	NT 1814	Rivet	2	
44	NT 2596	Lock Screw	6	

STRAP TRACK OPENER ASSEMBLY

500/400 MACHINE 1621-0840-00 1/30/96

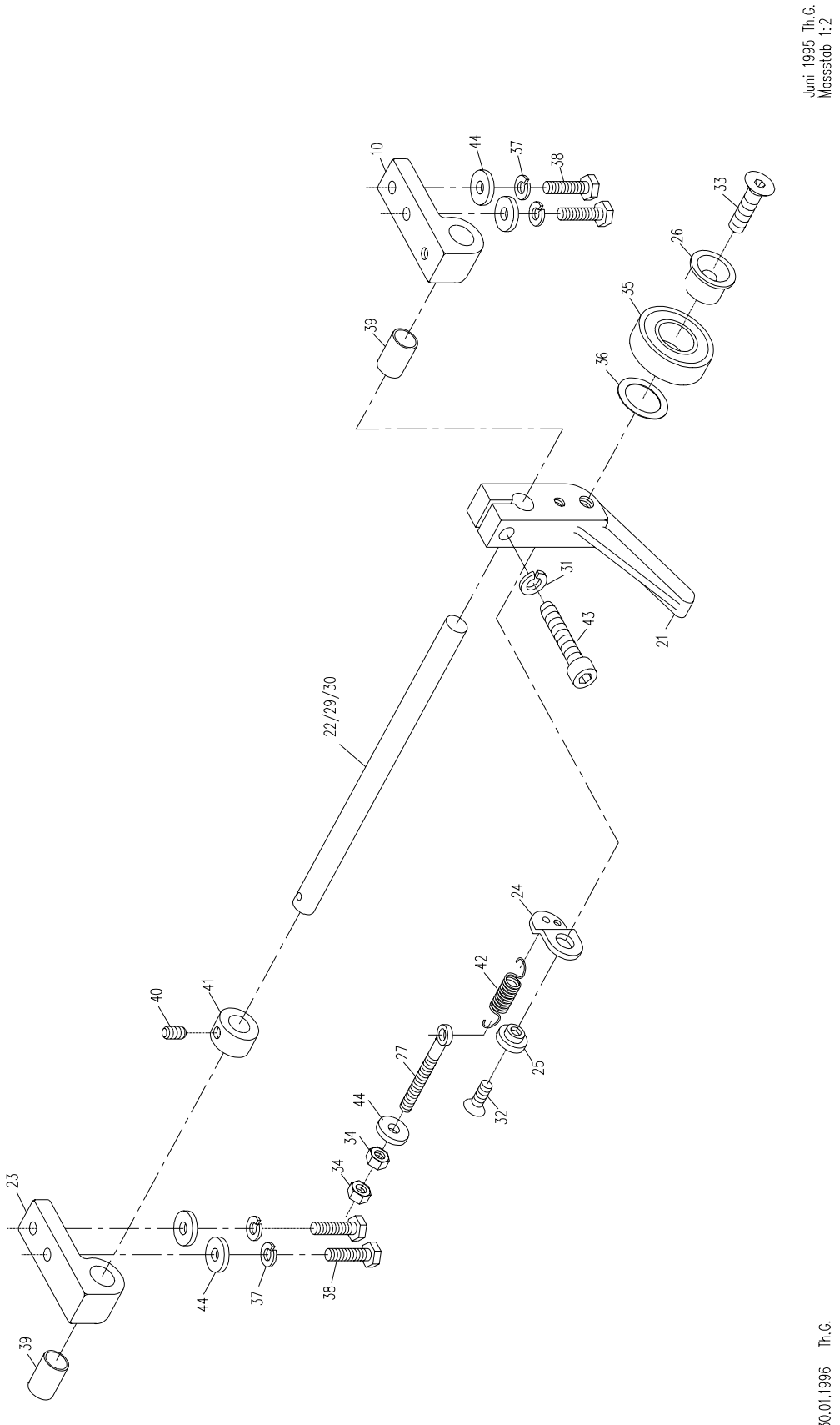

STRAP TRACK OPENER ASSEMBLY

500/400 1621-0840-00

600/500 1622-0840-00

800/400 1630-0840-00

800/600 1630-0840-00

Item	Part Number:	Description:	Qty:	Notes:
10	1620-0840-10	Bearing Block	1	
21	0401-0820-01	Track Opener Arm	1	
22	1608-0820-02	Track Opener Shaft **800/400 & 800/600**	1	
23	0401-0820-03	Bearing Block	1	
24	0101-0151-03	Pivot Block	1	
25	0101-0151-04	Bushing	1	
26	0401-0820-13	Flange Bushing	1	
27	0401-0820-14	Eye Bolt	1	
29	1603-0820-02	Track Opener Shaft **500/400**	1	
30	1602-0820-02	Track Opener Shaft **600/500**	1	
31	NT 61	Lock Washer	1	
32	NT 198	Flat Head Screw	1	
33	NT 497	Flat Head Screw	1	
34	NT 14	Hex Nut	2	
35	NT 424 **	Bearing	1	
36	NT 514	Spacer	1	
37	NT 66	Lock Washer	4	
38	NT 185	Hex Screw	4	
39	NT 1205	Bushing	2	
40	NT 581	Set Screw	1	
41	NT 694	Collar	1	
42	NT 696 **	Tension Spring	1	
43	NT 141	Socket Cap Screw	1	
44	NT 339	Washer	5	

FAN ASSEMBLY

1620-0850-00 7/7/97

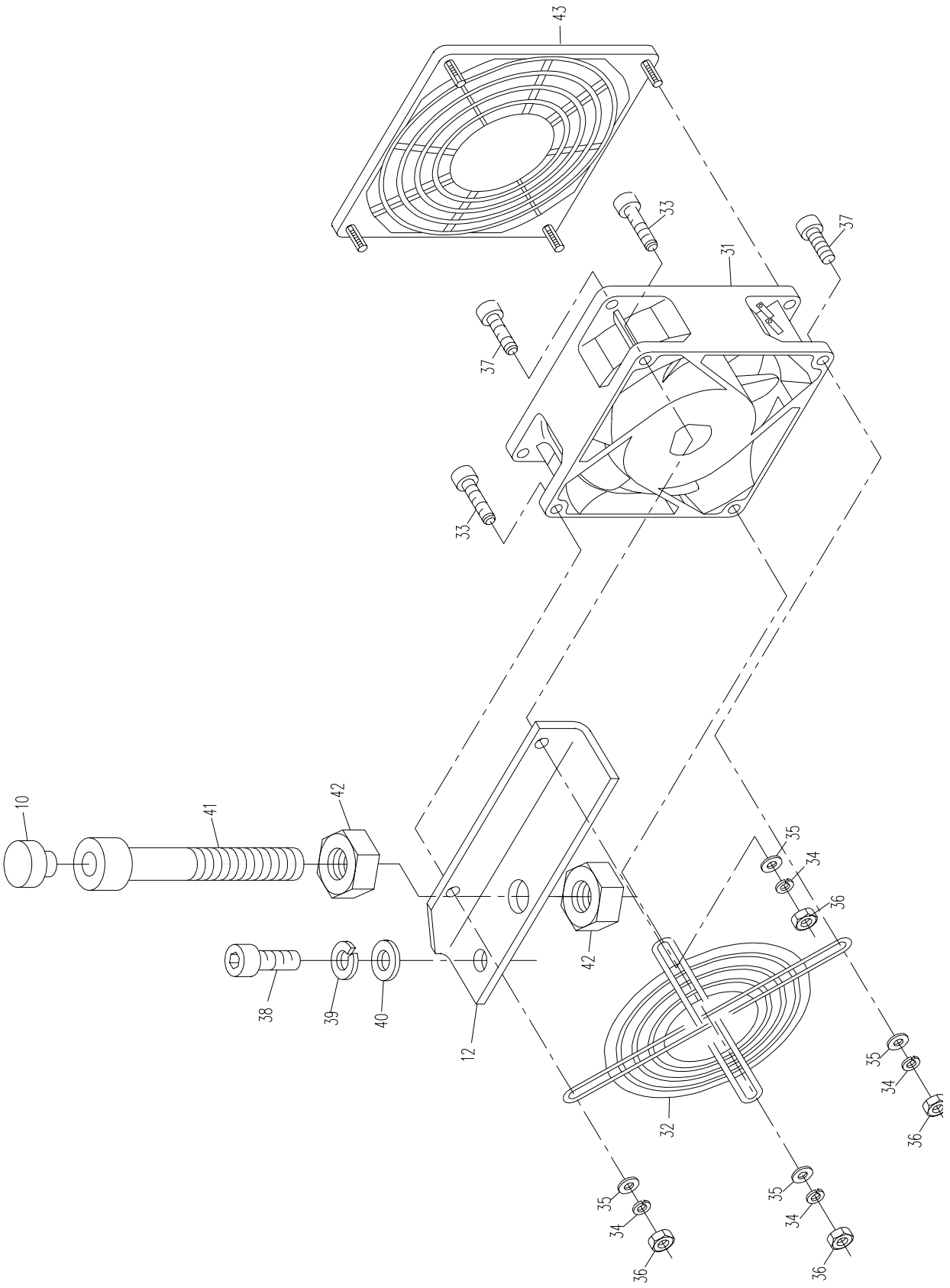

FAN ASSEMBLY				
1620-0850-00				
Item	**Part Number:**	**Description:**	**Qty:**	**Notes:**
1	1620-0851-00	Fan Bracket Complete	1	
10	0101-0100-17 **	Bumper	1	
31	ME 1759	Fan 24 V. DC	1	
32	ME 1249	Fan Guard	1	
33	NT 203	Socket Cap Screw	2	
34	NT 176	Lock Washer	4	
35	NT 72	Washer	4	
36	NT 13	Hex Nut	4	
37	NT 27	Socket Cap Screw	2	
38	NT 22	Socket Cap Screw	1	
39	NT 66	Lock Washer	1	
40	NT 19	Washer	1	
41	NT 1048	Socket Cap Screw	1	
42	NT 239	Hex Nut	1	
43	ME 1449	Fan Guard	1	

ELECTRICAL COMPONENTS ASSEMBLY

1620-1100-00 12/3/97

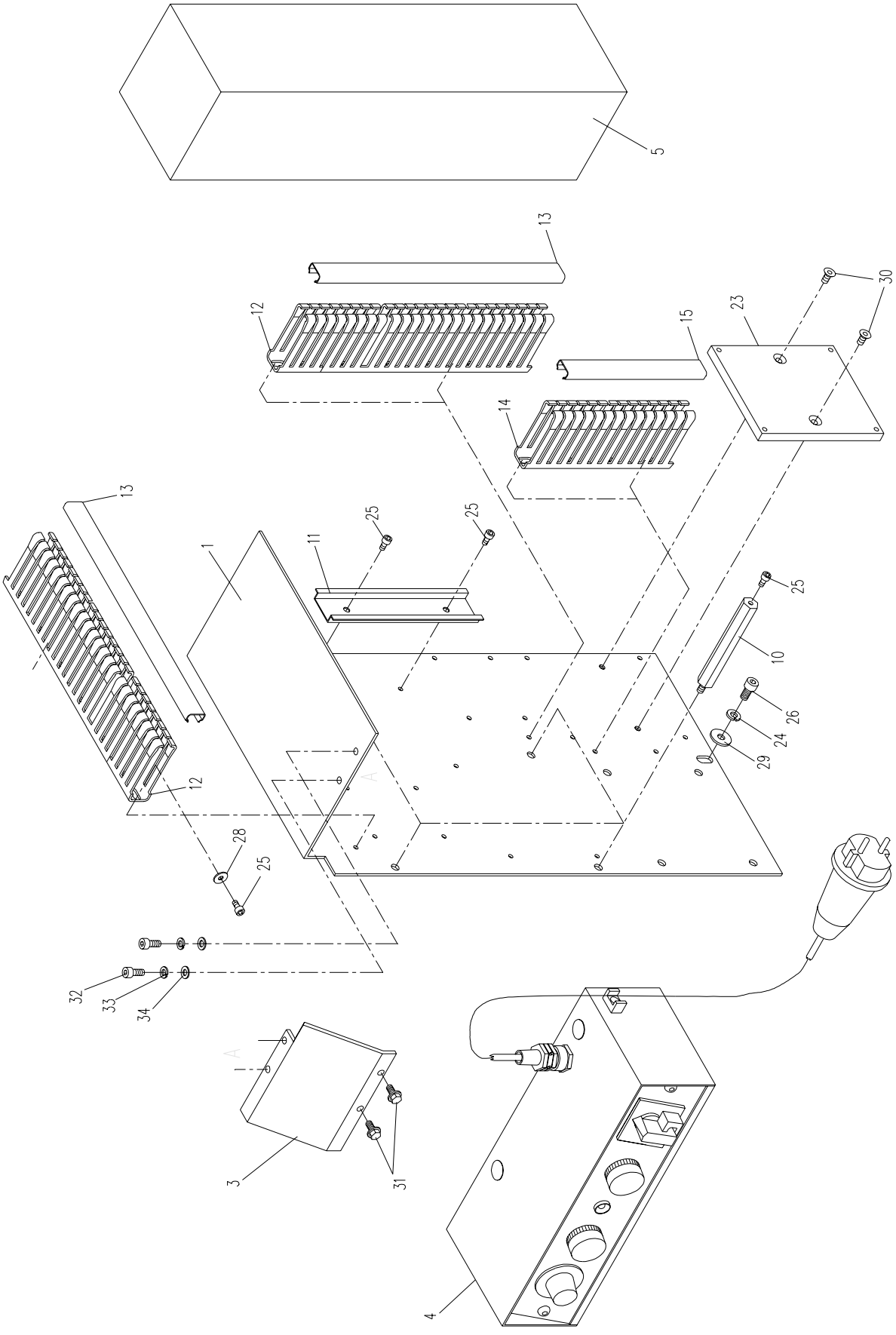

ELECTRICAL COMPONENTS ASSEMBLY				
1620-1100-00				
Item	**Part Number:**	**Description:**	**Qty:**	**Notes:**
1	1620-110000-25	Base Plate Complete	1	
3	1620-1102-00	Cover	1	
4	1620-1130-00	Control Panel Assembly	1	
5	1620-1150-00	Enclosed Components Assembly	1	
10	1620-1100-10	Stand Off	4	
11	1620-1100-24	Din Rail	1	
12	1620-1100-12	Cable Channel	2	
13	1620-1100-13	Cable Channel Cover	2	
14	1620-1100-14	Cable Channel	1	
15	1620-1100-15	Cable Channel Cover	1	
23	1620-1100-23	Adapter Plate	1	
24	NT 66	Lock Washer	2	
25	NT 95	Socket Cap Screw	14	
26	NT 322	Socket Cap Screw	2	
28	NT 309	Washer	8	
29	NT 339	Washer	2	
30	NT 1124	Flat Head Screw	2	
31	NT 1050	Lock Screw	2	
32	NT 8	Socket Cap Screw	2	
33	NT 74	Lock Washer	2	
34	NT 12	Washer	2	

CONTROL PANEL ASSEMBLY				
1620-113000-00				
Item	**Part Number:**	**Description:**	**Qty:**	**Notes:**
1	1620-113100-00	Control Panel Cover Assembly	1	
10	1620-113000-10	Control Panel Face Plate	1	
14	NT 806	Star Washer	1	
15	NT 13	Hex Nut	1	
16	NT 146	Flat Head Screw	1	
17	NT 74	Lock Washer	2	
18	NT 176	Lock Washer	2	
19	NT 8	Socket Cap Screw	2	
20	NT 13	Hex Nut	1	
21	NT 2332	Countersunk Screw	2	
22	ME 457	Cable Connector	1	
23	NT 822	Washer	2	
24	ME 952	Snap Plug	2	
25	ME 2555	Main Switch	1	
26	ME 456	Hex Nut (Metal)	1	
27	ME 278 A	Illuminated Push Button	1	
28	ME 52 A	Illuminated Push Button Base	1	
29	ME 1842 **	Bulb 24 V.	1	
30	0101-0140-48	Retaining Washer	2	
31	ME 55 A	Pilot Light	1	
32	ME 90 A	Light Base	1	
33	ME 266 **	Bulb 130 V.	1	
34	ME 314 A	Light Base	1	
35	ME 1668	Potentiometer	1	
36	ME 1128	Dial Plate	1	
37	ME 1129	Knob	1	
38	ME 2615	Power Line Cable	1	
39	ME 1797	Plug	1	
41	ME 1665 A	L.E.D.	1	
42	ME 1813	Plug	1	
43	ME 1682	Cable Clip	1	
44	NT 41	Cheese Head Screw	1	
45	ME 2131	Cable Grommet	1	
46	ME 2130	Cable Grommet	1	
47	ME 666	Cable Clamp	1	
48	ME 1680	Counter (optional)	1	
49	ME 121 A	Selector Switch - 3 Position (optional)	1	
50	ME 1934	Illuminated Push Button Base 3 Pos. (opt.)	1	
51	ME 98 A	Push Button Base - 2 Position	1	
52	ME 100 A	Selector Switch - 2 Position	1	

SUPPORT FRAME ASSEMBLY				
500/400 1621-1401-00				
Item	**Part Number:**	**Description:**	**Qty:**	**Notes:**
5	1621-140110-00	Frame	1	
12	1621-140100-12	Nut Plate	1	
15	NT 261	Socket Cap Screw	2	
16	NT 61	Lock Washer	4	
17	NT 82	Washer	4	
18	NT 16	Hex Nut	4	
20	NT 815	Socket Cap Screw	2	

DOUBLE COMPACTOR ASSEMBLY

500/400 1621-1501-00 1/04/1998

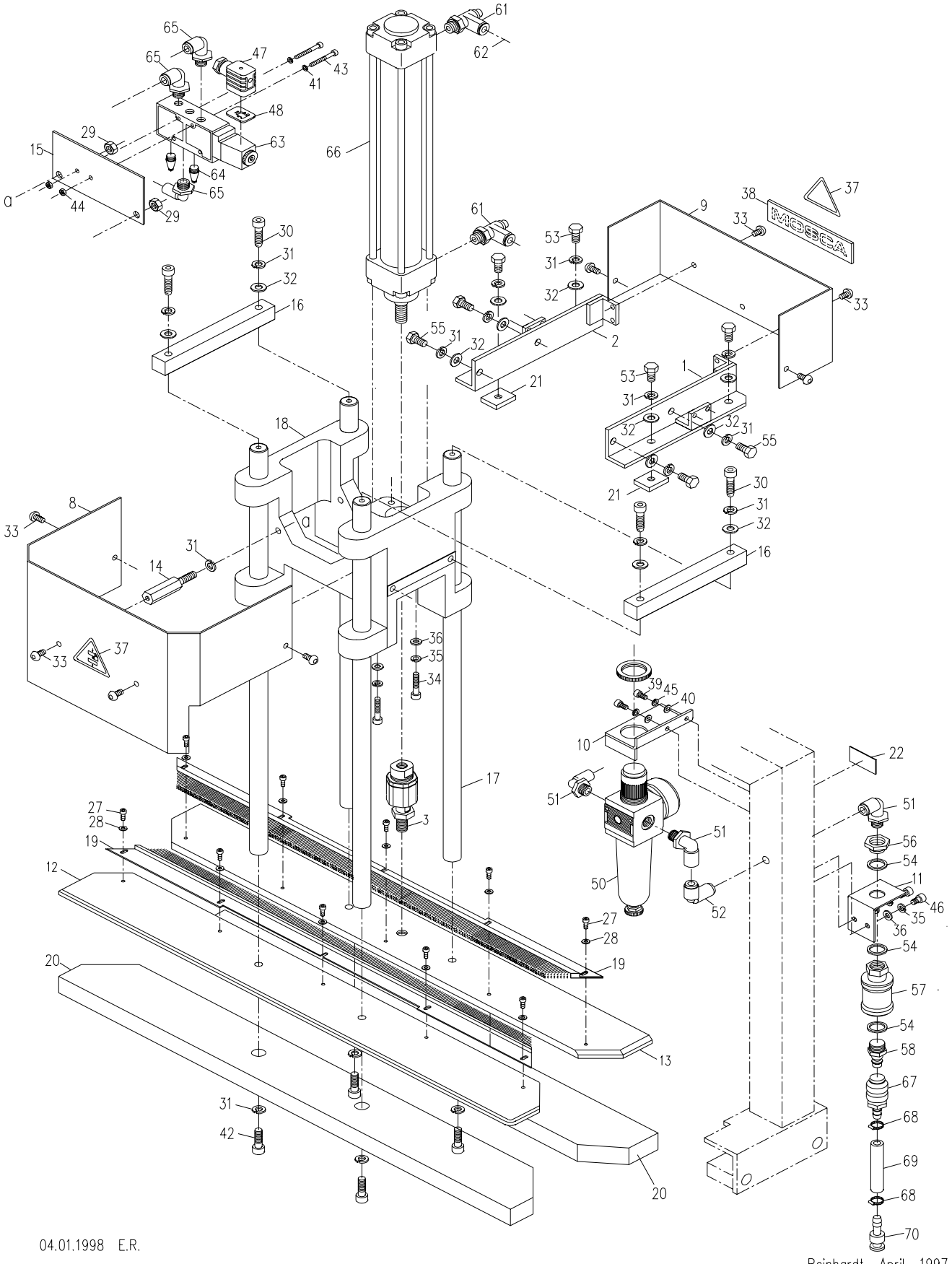

DOUBLE PRESS ASSEMBLY (OPTIONAL)

400-300 1620-1501-00

500/400 1621-1501-00

Item	Part Number:	Description:	Qty:	Notes:
1	1622-150110-00	Right Press Block Support	1	
2	1622-150120-00	Left Press Block Support	1	
3	1622-150130-00	Alignment Coupling **400/300**	1	
8	1622-150100-08	Press Block Cover	1	
9	1622-150100-09	Press Block Cover	1	
12	1630-150100-12	Press Plate Front	1	
13	1630-150100-13	Press Plate Rear	1	
14	1622-150100-14	Stand Off	2	
15	1622-150100-15	Solenoid Valve Bracket	1	
16	3105-120000-02	Press Rod Connector	2	
17	1620-150100-17	Press Rod **400/300**	4	
18	3105-120000-01	Press Block	1	
19	1620-150100-19	Brush **400/300**	2	
20	1620-150100-20	Press Pad **400/300**	2	
21	0502-0220-24	Nut Plate	2	
22	1622-150100-22	Shield	1	
27	NT 27	Socket Cap Screw	6	
28	NT 72	Washer	6	
29	NT 16	Hex Nut	2	
30	NT 268	Socket Cap Screw	4	
31	NT 61	Lock Washer	16	
32	NT 15	Washer	12	
33	NT 2368	Buttonhead Screw	8	
34	NT 144	Socket Cap Screw	4	
35	NT 66	Lock Washer	4	
36	NT 19	Washer	6	
37	NT 2444	Warning Sign	2	
38	NT 674	Manufacturer's Plate	1	
39	NT 927	Socket Cap Screw	2	
40	NT 309	Washer	2	
41	NT 176	Lock Washer	4	
42	NT 141	Socket Cap Screw	4	
43	NT 117	Socket Cap Screw	2	
44	NT 13	Hex Nut	2	
45	NT 49	Hex Screw	4	
46	NT 302	Hex Screw	4	
47	ME 837	Coil Plug	1	
48	ME 836	Coil Plug Gasket	1	
49	NP 143	Alignment Coupling **500/400**	1	
50	NP 547	Filter Regulator	1	
51	NP 176G	Angle Connector	1	
52	NP 32	Angle Connector	1	
53	NP 30	Seal Ring	1	
54	NP 18	Seal Ring	2	
55	NP 266	T- Connector G 1/4"	1	
56	NP 16	Reducer Bushing	1	
57	NP 17	Hand Shut-Off Valve	1	
58	NP 237	Hose Connector	1	
59	NP 29	Angle Connector	1	
60	NP 121	Quick Disconnect	1	

DOUBLE PRESS ASSEMBLY (OPTIONAL)				
400-300 1620-1501-00				
500/400 1621-1501-00				
Item	**Part Number:**	**Description:**	**Qty:**	**Notes:**
61	NP 2 C	Angle Connector	2	
62	NP 24 C	Tubing	3	
63	NP 458C01	Solenoid Valve w/Coil	1	
64	NP 267	Muffler	2	
65	NP 379 G	Angle Connector	3	
66	NP 1	Air Cylinder, 40 x 200 **400/300**	1	
67	NP 21	Quick Disconnect	1	
68	NP 156	Hose Clamp	2	
69	NP 46	Hose 8 x 3	5	
70	NP 19	Quick Disconnect	1	
71	0219-040000-13	Press Rod **500/400**	4	
72	0401-130000-03	Brush **500/400**	2	
73	1621-150100-20	Press Pad **500/400**	2	
74	NP 36	Air Cylinder, 40 x 320 **500/400**	1	

RO-MP2 PHOTO CONTROL 1999

1511-0090 4/6/1999

1. Remove H1 (selector switch) completely. (see diagram page 2.5) Diagram shown below is found under H1 selector switch.
2. Drill 7.5mm hole next to right side of "power on" label for new smaller "power on" light.
3. Hook Indicator lens up to T2 and T4 on main switch.
4. Install switch and switch body where H1 used to be, with red toward back.
5. Wire according to illustration.
6. Install label on front panel on top of existing Mosca label.

Rear view with panel flipped upside down.

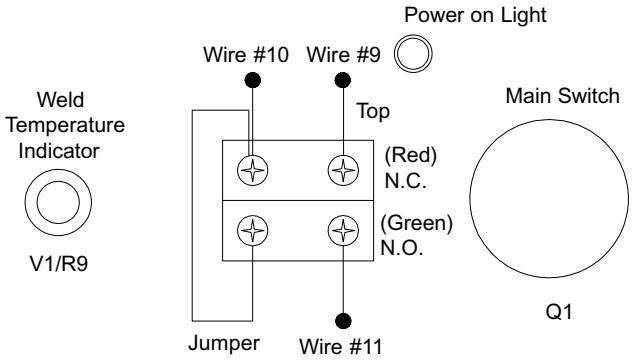

Electrical Box

1. Locate cable from control panel and install wires to the following:
   - wire #11 - Plug X11 Terminal 7
   - wire #9 - Plug X11 Terminal 5
   - wire #10 - Plug X6 Terminal 9

2. Install photo wires to the following on X6:
   - Black - Plug X6 Terminal 9 with wire #10.
   - Brown - Plug X6 Terminal 7.
   - Blue and Orange - Plug X6 Terminal 8.

3. Run wires from the bottom of plugs X11 and X6 to the following:
   - Plug X11 Terminal 7 to E7 on P.C. Board.
   - Plug X11 Terminal 5 to E4 on P.C. Board
   - Plug X6 Terminal 7 to 31
   - Plug X6 Terminal 8 to 20

Photo Control

1. Mount on right side of machine in front of cable tube.
2. Drill (2) 2.5mm holes for photo control and use 3mm tap. (Keep photo at least 2mm off of table)
3. Use (2) 3 x 22mm screws that are included with the photo control for mounting photo. Add 4mm wide washers (as needed) between the photo control and machine frame to properly align the photo and reflector. Grind off screw ends if they are not flush with the track frame.

Reflector Bracket

1. Mount bracket on left side of machine so it sits at least 2mm above table top.
2. Drill (2) 3.3mm holes into side of track frame; Partially countersink holes and then tap 4mm.
3. For 500/400 machines or smaller, the reflector must be diagonally cut on the corner for access to the table mounting screw.
4. Install Bracket using 4 x 8mm flat head screws.
5. Make sure front table top does not hit screws when it is lifted up.

RO-MP-2 PHOTO CONTROL 1999				
1511-0090				
Item	**Part Number:**	**Description:**	**Qty:**	**Notes:**
1	ME 1851	Photo Control	1	
2	1023-0644	Indicator	1	
3	ME 121A	3 Position Switch	1	
4	ME 160A	Switch Body	1	
6	ME 1151	Reflector Tape	1	
7	1036-0057	Reflector Bracket	1	
8	1039-0003	Name Plate	1	
9	NT 5	Flat Head Screw 4 x 8mm	2	
10	ME 1374	Insulated Wire Tip (Red)	2	
11	ME 1372	Insulated Wire Tip (Gray)	2	
12	ME 1043	Insulated Wire Tip (White)	3	
13	ME 1435	Connector	4	
14	1025-0403	Wire #18 (Blue)	4 Ft.	